Structural Practices

practical knowledge beyond the textbook

A Case Study

Multistory Wood Frame Shrinkage Effects on Exterior Deck Drainage

By Zeno Martin, P.E., S.E. and Eric Anderson, P.E., S.E.

Wood shrinks perpendicular to grain as it loses moisture, a well known phenomenon. Shrinkage magnitudes depend on the size of wood members, grain orientation, and moisture content. For typical conventional light-frame wood floor construction with solid sawn lumber, framing shrinkage due to wood drying can be on the order of 0.25 inch to 0.5 inch or more per floor. Engineered wood products are manufactured relatively dry compared to solid sawn lumber, and as a result have less shrinkage potential compared to solid sawn lumber framing.

In addition to shrinkage, settling occurs as construction gaps between stacked wall components (studs, plates, floor sheathing, etc.) close over time. The magnitude of gapping settlement for light-frame wood construction is not well documented, but one study (Commins, STRUCTURE magazine, August 2007) found that light gauge steel framing had settlement of around 0.125 inch per floor. Settlement of conventional light-frame wood construction is assumed to be of similar magnitude. The amount of shrinkage and settling varies depending on initial moisture contents, species, and sizes of wood components used.

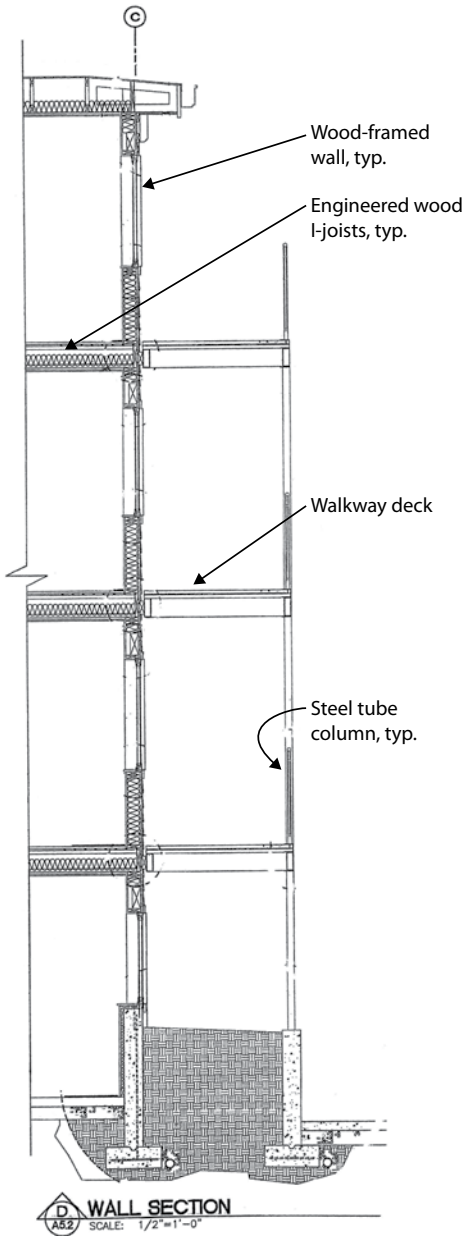

Figure 1: Section of wood framed wall system showing deck framing with steel deck support columns.

In addition, other effects may play a role in building shortening. Compression of materials due to vertical gravity load also occurs, but typically this is of a lower magnitude than shrinkage and gapping effects and is considered negligible for this discussion. The gapping settlement described herein refers to that within the stacked wall framing components, and not to foundation settlement. Differential foundation settlement is also beyond the scope of discussion in this paper, but should be considered when applicable.

Building codes require that shrinkage analysis be completed, for buildings three stories or greater in height, that shows shrinkage will not have any adverse effects (e.g. 2009 *International Building Code* (IBC) Section 2304.3.3). This type of evaluation should include adverse effects to drainage caused by deck back-slopes (toward building walls) resulting from framing shrinkage; however, such application is not explicitly named in the building codes and may be overlooked.

Historically, decks have been required to slope, for drain purposes, ¼ inch per foot (2%) minimum (e.g. 1997 *Uniform Building Code* (UBC) Section 1402.3). Explicit requirements for deck drainage no longer exist in the IBC. Now, the 2009 IBC, Chapter 15 Section 1507, contains provisions for roof decks where the slope requirements are dependent on type of covering; however, a 2% minimum slope is still required for a number of different coverings. Further, IBC Section 1405.4 requires flashing to be installed to prevent moisture from entering walls or to redirect it to the exterior, with Section 1405.4.1 specifying that locations in which moisture can accumulate should be avoided, implying drainage should be directed away from building walls.

This article examines a case study of multistory wood frame shrinkage and settlement causing exterior waterproof decks to slope back toward the exterior wall. In this case, the deck is supported on one side by a ledger at the wall framing rim board and by exterior steel columns on the other side (*Figure 1*). The steel column supports did not have the same shrinkage and settlement over time as the wall framing and, as a result, the differential led to back-sloping exterior decks. These back-sloping decks concentrated rain runoff toward the wall and deck ledger area. Significant decay

Zeno Martin, P.E., S.E. is a Senior Associate in the Seattle, Washington office of Wiss, Janney, Elstner Associates, Inc. and can be reached at ***zmartin@wje.com****.*

Eric Anderson, P.E., S.E. is a Senior Associate in the Portland, Oregon annex office of Wiss, Janney, Elstner Associates, Inc. and can be reached at ***eanderson@wje.com****.*

Figure 2: Deck ledger attached to the inner wood framed wall and outer steel posts. (Note: Project is under construction in photo.)

Figure 3: Deck framing supported by steel posts adjacent to the wood framed building wall creating a "fixed" deck condition. (Note: Project is under construction in photo.)

damage to the wood framed walls occurred when the detailing of the weather-resistive barrier and flashings could not resist the magnitude of resultant drainage to the wall from the deck. Flashing design defects were also at issue. However, the objective of this article is to raise awareness of the back-slope drainage problem, present the magnitudes of shrinkage and settlement observed, and to offer recommendations on how to prevent deck back-slope conditions from developing.

Case Study

This multifamily residential building and deck has four stories of vertically stacked walls constructed of dimension lumber stud framing. Engineered wood I-joists were used for floor framing. A tube steel ledger was attached to the rim joist at the wood framed building wall for support of the exterior deck framing (*Figure 2*). Steel columns supported the outer edge of the deck. In some locations, deck support was also provided by steel columns on the inner deck edge (*Figure 3*). The building was constructed in the Willamette Valley in Oregon. The project consisted of multiple buildings constructed similarly, with exterior walkway decks surrounding the main entry perimeter areas (approximately ⅔ of the perimeter face parking areas). Deck back-slopes were observed to concentrate rain water toward the wall and deck ledger area, exacerbating water infiltration and leading to significant decay damage to the wood framed building walls.

Moisture intrusion problems were manifested only a few years after construction was completed. Five years after construction was completed, comprehensive deck slope measurements were made of the top surface of the exterior walkway decks. *Table 1* summarizes results of deck slope measurements. Approximately half of the deck areas were constructed in accordance with *Figures 1* and *2*, where the deck ledger was attached to the rim joist such that the deck could rotate relatively freely toward the wall – a so-called "free" condition in *Table 1*. The other half of the decks were constructed

Table 1: Summary of Measured Deck Slopes.

Summary of Deck Slopes for:	Story	Measured Locations	Deck Slope (%)		
			Average	Minimum	Maximum
Free Ledger Condition	4	23	-2.38	-0.70	-2.50
	3	23	-1.22	-0.50	-2.20
	2	23	-0.81	-0.20	-1.60
Fixed Ledger Condition	4	24	-0.26	0.70	-0.90
	3	24	-0.19	1.00	-1.10
	2	24	-0.27	1.20	-1.60

Note: Negative slopes drain to building wall, positive slopes drain away from building wall.

Table 2: Summary of Difference between Free and Fixed Deck Slopes and Apparent Resultant Shrinkage.

Story	Δ Deck Slope(1) average (%)	Apparent(2)	
		Cumulative Shrinkage (in.)	Story Shrinkage (in.)
4	2.11	1.14	0.58
3	1.03	0.56	0.26
2	0.55	0.30	0.30

(1) Difference between free and fixed measurements.
(2) Assuming the measured fixed condition represents initial free condition.

where the ledger was supported by a steel post adjacent to the building wall restricting inward deck rotation (*Figure 3*) – a so-called "fixed" condition in *Table 1*.

The fixed deck areas with a steel support at the ledger serve as a control, in comparison to the free condition where the deck can more freely rotate at the ledger to rim joist connection. The fixed condition supports the deck such that settlement and shrinkage of wood framing has minimal influence on deck rotation. For the purpose of estimating shrinkage and settlement of wood framing, the fixed deck areas were assumed to represent the as-built slope of the decks and construction tolerances assumed to average out. Using these assumptions, *Table 2* summarizes the difference between free and fixed deck slopes and the resultant apparent shrinkage of exterior building walls estimated by comparing these two conditions.

The building's wood shear wall system was constructed using shrinkage compensating devices at the overturning hold down locations. These devices ensure that the shear wall hold down system remains tight even after wood shrinkage or settlement occurs. In this case, the shrinkage take-up devices were found to be extended (*Figure 4, page 36*) confirming that shrinkage and settlement had occurred, assuming the take-up devices were originally installed tight. Unlike the shear walls, the exterior decks had no provision to ensure that proper drainage slope was maintained in the event wood frame shrinkage and settlement developed. In this instance, resultant deck back-sloping led to significant damage to the wood framed walls related to concentrated moisture intrusion at the deck attachment locations (*Figure 4*).

A couple of other influential factors affecting the measured slope values should also be noted. Heavy rains reportedly occurred during original construction on this project, during the framing phase before building envelope enclosure. These conditions could have increased the moisture content of the framing (assuming no efforts were made at framing dry-out before envelope close-in), effectively increasing subsequent drying shrinkage. Also, resultant decay damage was severe and it is possible that a portion of the measured shrinkage and settlement was due to crushing of decayed wood material. These highlight some of the practical variables that influence the measured phenomena. These and other specific project details should be considered when interpreting these results toward broader application.

Wood Posts

The building in this case study was constructed with steel posts to provide outer edge deck support. The resultant shrinkage differential may have appeared more predictably obvious as a result. However, similar behavior has been observed by the authors for a multistory building constructed with exterior entry decks supported on wood posts at the outer edge (*Figure 5, page 36*). In the latter case, there was no observed resultant sheathing or framing damage, but ponding or accumulation of water on the decks near the wall was evident.

Wood shrinkage parallel to grain is approximately 25 to 50 times less than shrinkage perpendicular to grain. Thus, parallel to grain shrinkage is often considered negligible in comparison to perpendicular to grain shrinkage. In this respect, exterior wood deck post supports will not have the same shrinkage or settlement potential as a wood framed wall assembly with stacked sill and plate components (*Figure 5*). This type of exterior deck construction, therefore, may also require measures to avoid back-slopes induced by shrinkage differential problems.

Conclusions

The combination of shrinkage and settlement (i.e., compression of framing "gaps") was estimated to average 0.38 inch per floor for the case study described. The observed magnitude of shrinkage and settlement corresponds reasonably well to the "conservative" recommendation of 0.36 inch per floor for this type of building per Commins (2007). As described, heavy rains during initial construction and resultant wood decay from moisture intrusion induced by deck back-slopes may have contributed to the relatively high magnitude of shrinkage and settlement observed in this case study. Another similar case examined by the authors (*Figure 5*) measured only approximately 0.125 to 0.20 inch of combined shrinkage and settlement per floor.

Exterior decks supported by multistory wood framed walls on their inner edge and exterior vertical posts (or walls) on the outer edge are prone to shrinkage differentials that can create a back-sloping condition. In stacked multistory construction, the effect of shrinkage is cumulative, and the magnitudes can become significant even for three or four story construction. While this phenomenon is not new, the authors have seen little attention paid to the matter in industry literature with respect to mitigating this effect and its potential to cause accumulated puddling and resultant damage.

Recommendations

Designers should be aware that multistory wood framed walls supporting exterior decks are prone to shrinkage and settlement differentials that can create a back-sloping condition and potential moisture intrusion problems. It is recommended that a reasonable magnitude of shrinkage and settlement be anticipated and accommodated in the design of the deck framing system and/or drainage detailing. If preemptive sloping to account for shrinkage and settlement is not specified to ensure resultant drainage is maintained after framing shrinkage has occurred, then the designer should consider provisions for deck slope adjustability and/or drainage near the deck to wall interface to avoid potential moisture intrusion problems into exterior walls.

Settlement and Shrinkage Magnitudes

The magnitude of shrinkage and settlement depends on a number of variables but, for common conventional light-frame wood construction, the following values are recommended for design:

- 0.25 inch per floor with engineered wood I-joist and solid sawn lumber wall framing when products are installed and kept relatively dry (at or below 19% moisture content) during construction
- 0.375 to 0.5 inch per floor with engineered wood I-joist and solid sawn lumber wall framing when products are installed and/or allowed to get relatively wet (above 19% moisture content) during construction
- 0.5 inch to 1.0 inch per floor with solid sawn joists depending on moisture contents of products during construction

These recommended design shrinkage and settlement values are similar to those reported by Commins (2007) and represent a somewhat conservative, but not unrealistic, condition as shown by this case study.

Design for Adjustment

To maintain desired deck slopes after shrinkage and settlement has occurred, provisions could be made to install an adjustable post or post base. These provisions would need to accommodate cumulative settlement at each story. Alternatively, a leveling bolt adjustment could be installed at the deck to exterior post

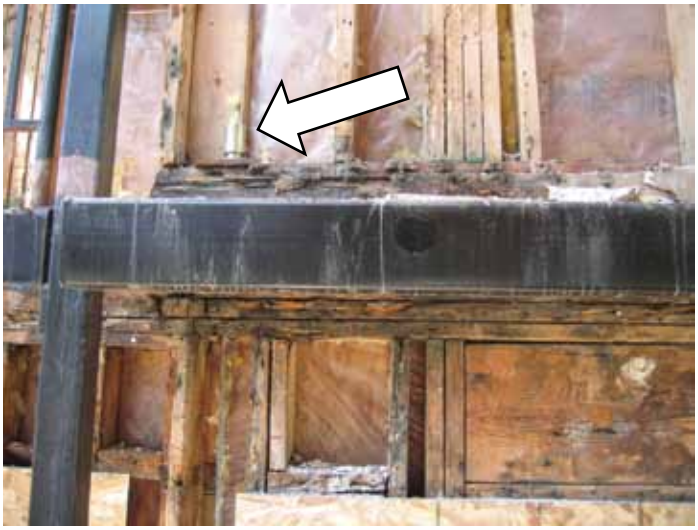

Figure 4: Typical shear wall hold down shrinkage take up device extended (arrow).

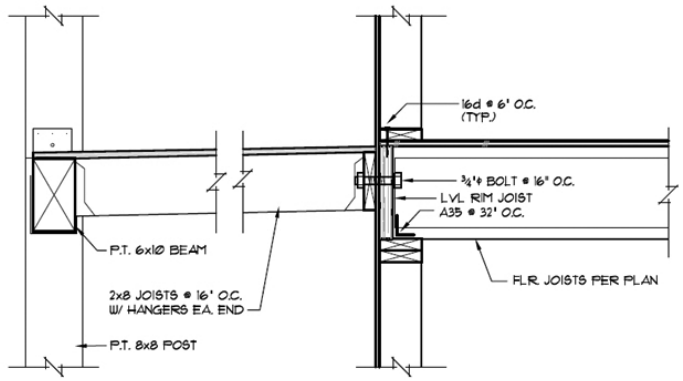

Figure 5: Wood post deck support columns.

attachment, or at the deck to building connection at each level. Caution would be necessary to ensure these structural adjustments would not damage the building or flashing details while adjustments are made.

Design for Drainage

Alternatively, provisions could be made to gap the deck near the building wall to allow for drainage. APA – The Engineered Wood Association provides details for a gapped ledger design when attaching the ledger to a solid sawn rim joist (this detail is not recommended for engineered rim joists). Alternatively, the deck membrane, or surface, can be gapped near the building wall to allow for drainage. In this approach, the ledger would be flashed. In either design, drainage is allowed to occur near the deck to wall interface, and flashing would be necessary to protect key connection details and direct ponding moisture to a gutter.▪

This article was previously published in *Wood Design Focus*, Fall 2010. It is reprinted with permission.

References

APA, 2002. *Build a Better Home: Walls*, APA–The Engineered Wood Association, Tacoma, WA, Form A530A, October 2002.

BSC, 2009. *Integrating Deck Ledger Board with Drainage Plane*, Building Science Corporation, Somerville, MA, BSC Info Sheet 304, May 14, 2009.

Commins, A.D., 2007. *Hold Down Systems: Key to Shear Wall Performance*, STRUCTURE magazine, National Council of Structural Engineers Associations (NCSEA), August 2007.

FPL, 2010. *Wood Handbook: Wood as an Engineering Material*, Forest Products Laboratory, Madison, WI, 2010.

IBC, 2009. *International Building Code*. International Code Council, Country Club Hills, IL, 2009.

Rummelhart, R., Fantozzi, J.A., 1992. *Multi-Story Wood Framed Structures: Shrinkage Considerations and Calculations*, Tenth Annual ASCE Structures Congress, San Antonio, Texas, April 13-15, 1992.

UBC, 1997. *Uniform Building Code*, International Conference of Building Officials, Whittier, CA, 1997.