Successful Detailing for Hot-Dip Galvanizing

By Alana Hochstein

Batch hot-dip galvanizing (HDG) after fabrication, a total immersion process in molten zinc, has a more than a 150-year track record of providing corrosion protection for steel in the harshest environments. Though primarily known for corrosion resistance, hot-dip galvanizing following ASTM A123, Specification for Zinc (Hot-Dip Galvanized) Coatings on Iron and Steel Products, is increasingly specified for low initial cost, durability, longevity, availability, versatility, sustainability, and aesthetics. To achieve these additional benefits, there are several areas where structural engineers and detailers can work together to ensure steel pieces are successfully fabricated to achieve maximum galvanizing quality without negatively impacting structural integrity. The best practices specific to hot-dip galvanized steel may be unfamiliar to structural engineers and detailers experienced in other methods of corrosion protection, but an upfront effort to incorporate these details will pay dividends in terms of reduced cost, quick turnaround, and optimal quality. This article summarizes key topics which have the most significant impact on the quality of hot-dip galvanizing for general corrosion protection, Architecturally Exposed Structural Steel (AESS), painting or powder coating after hot-dip galvanizing, and fireproofing.

Impact of HDG Process Temperature

Studies investigating common structural steel grades confirm the hot-dip galvanizing process produces no significant changes in the mechanical properties of the steel, but certain practices will reduce or eliminate concerns related to the galvanizing temperature (approximately 830 degrees F).

For example, when steel is immersed in the galvanizing kettle, the change in temperature affects areas with increased residual stress from severe cold working. Parts that are severely cold-worked reduce the steel's ductility and increase the potential for cracking during hot-dip galvanizing due to strain-age embrittlement, the effects of which are accelerated at the galvanizing temperature. Designers and steel detailers can incorporate best practices to reduce stresses induced during bending, hole-punching, rolling, and shearing prior to hot-dip galvanizing to avoid these concerns. Recommendations for design best practices, minimum bend diameters, and thermal treatments to relieve internal stresses are found within ASTM A143, Standard Practice for Safeguarding Against Embrittlement of Hot-Dip Galvanized Structural Steel Products and Procedure for Detecting Embrittlement.

The galvanizing process temperature can also impact susceptible fabrications, which may distort as a result of relieving stresses induced during steel production and fabrication. ASTM A384, Standard Practice for Safeguarding Against Warpage and Distortion During Hot-Dip Galvanizing of Steel Assemblies, identifies factors and types of fabrications prone to distortion as they experience different thermal expansion and contraction stresses in addition to uneven heating and cooling during angled immersion into the galvanizing kettle. Specifically, light gauge material (20 gage to < ¼ inch) welded or riveted to plate, bars, or angles tend to distort, as do a-symmetrical pieces and fabrications containing different material thickness that heat and cool at different rates. Distortion is primarily mitigated through design measures found within ASTM A384 to avoid high internal stresses and steel details for temporary or permanent bracing to provide stability during the inevitable thermal expansion and contraction cycles.

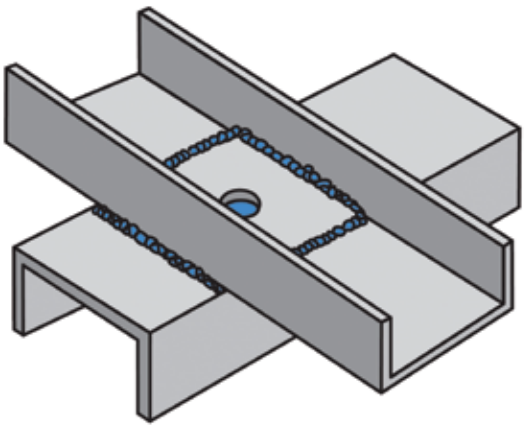

Overlapping surfaces.

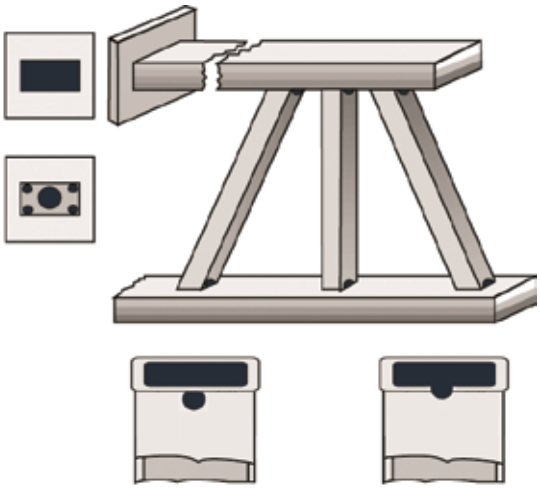

Holes for vertical and angled tube trusses.

Venting and Drainage Details

As hot-dip galvanizing involves the immersion of steel in a series of process tanks, it is critical to ensure the free flow of pretreatment solutions, air, and zinc so a smooth and uniform coating is achieved. Improper venting and drainage details can result in poor appearance, bare spots, excessive build-up of zinc, blowouts, or danger to plant personnel. To optimize galvanizing quality, ASTM A385, Standard Practice for Providing High-Quality Zinc Coatings (Hot-Dip), provides preferred venting and drainage details for poles, handrails, trusses, tanks, gusset plates, stiffeners, end-plates, and bracings. Most venting and drainage details do not impact structural integrity or design function, but occasionally the preferred hole sizes and placements may not be suitable for assemblies or trusses when large holes are placed on the sides of load-bearing members. Alternative hole details provided in ASTM A385, in addition to direct communication with the detailer and galvanizer, can lead to a suitable substitute, sometimes at the expense of aesthetic quality or overall corrosion protection.

Material Size and Shape

Galvanizing kettle dimensions limit the size of articles which can be fully coated. The average galvanizing bath is 40 feet long, but 55- to 60-foot-long baths are common. Oversized articles are designed in modules, galvanized separately, and joined by bolting or welding.

Rust bleeding.

Alternatively, progressive dipping (dipping each end of the article sequentially) is used to fully coat articles nearly double the bath dimensions. However, progressive dipping results in uneven heating and cooling of the material since only a portion of the article is immersed in molten zinc while the other is exposed to cooler air. This results in different expansion rates for the upper and lower part of the component, which may distort the article. Distortion can be mitigated by confirming lifting arrangements with the galvanizer, requesting increased venting and drainage to allow quick immersion and withdrawal from the galvanizing kettle, and designing for thermal expansion conditions. Specifically, welds and constrained or framed portions of an assembly must be designed to handle the increased stresses from thermal expansion at the galvanizing temperature.

Bolted Structural Connections

The components of a bolted connection, including nuts, bolts, or studs, are sent to the galvanizer when disassembled. Components with male threads are galvanized normally, while nuts and holes are provided an increased thread size after galvanizing to accommodate the increased bolt thread diameter that results after application of a thick galvanized coating. Oversizing guidelines for interior threads for galvanizing are detailed in Table 5 of ASTM A563, Specification for Carbon and Alloy Steel Nuts.

For bearing type connections, the presence of a hot-dip galvanized coating on the contact surfaces is not detrimental to performance and does not affect design strength. Section J3.2 of the AISC *Manual of Steel Construction: Load and Resistance Factor Design* (LRFD manual) states oversized holes are not to be used in bearing type connections, but hole interior may require unblocking or cleaning after galvanizing to ensure bolt placement.

For slip critical connections, galvanized steel offers a lower slip coefficient than bare or mild steel and therefore decreased slip resistance. Clearance holes sized $\frac{1}{8}$ inch larger than the nominal bolt diameter are acceptable for slip-critical connections and accommodate galvanized bolts without hole clearing. Standard clearance holes are already sized $\frac{1}{8}$ inch larger for bolts sized 1 inch or greater, but this same increase results in an oversized hole for bolts sized less than 1 inch in diameter. When oversized holes are used, a further reduction in slip capacity due to the reduction in the connection area ensures slip does not occur. As the design slip resistance is reduced 15% for connections using oversized through-holes, this leads to additional bolts in the connection design.

Where painted or black steel faying surfaces are required to achieve a higher slip resistance, the HDG coating is ground off in the field, or a masking material is applied before galvanizing to prevent coating formation. Suitable masking materials include acid-resistant or high-temperature paints, tapes, greases, and thread compounds. Alternatively, zinc-silicate paints are applied to galvanized faying surfaces to increase the slip coefficient without coating removal.

Welded Connections

It is possible to weld after HDG using all conventional welding techniques with no impact on overall structural design. However, when assemblies are welded prior to HDG, there are recommended design and detailing practices to ensure adequate corrosion protection and structural integrity.

It is best practice to avoid designs such as back-to-back channels with narrow gaps between overlapping surfaces to be welded. Less viscous pretreatment solutions enter the gap between these surfaces, but zinc cannot enter gaps less than $\frac{3}{32}$-inch-wide. Trapped fluids or air will superheat to gas at the galvanizing temperature and may result in destructive pressures or weld blowouts. Otherwise, the internal surfaces uncoated by zinc will eventually weep out of the gap with unsightly rust stains. Such areas need to be sealed using silicone caulking or an epoxy sealer to prevent weepage.

Where overlapping surfaces are unavoidable, the engineer should be involved and informed regarding the options for steel details listed in ASTM A385 to avoid these concerns. When the gap between overlapping surfaces is less than $\frac{3}{32}$-inch-wide, fully seal-weld these areas to prevent the access

Galvanizing roughness.

of cleaning fluids. However, seal-welding can inadvertently affect the structural behavior of the welded components, and the use of seal-welding requires a variance to comply with AWS D1.1, *Structural Welding Code – Steel*. Alternatively, the detailer may specify stitch welding when the gap is at least $\frac{3}{32}$ inch. Although this method provides full corrosion protection to the interior area, the engineer should be consulted to confirm if a full seam weld is required for structural purposes.

Architecturally Exposed Structural Steel

Because the initial appearance of HDG is challenging to predict, a uniform finish can be difficult to achieve without significant cost to remedy common surface conditions unsuitable for AESS members (roughness, runs, excess zinc). To facilitate communication and minimize the cost, Section 10 of the AISC *Code of Standard Practice* describes a categorical approach for AESS members based on viewing distance and type/function of the structure. To achieve the elevated standards of each AESS category, the AESS Custom category can be used to incorporate additional details to maximize aesthetic quality.

For example, abrasive blast cleaning of the steel before galvanizing, per SSPC SP 6/NACE No. 3, is not required for standard structural steel but is the specified minimum for AESS and will significantly improve the appearance of assemblies containing multiple steel chemistries and steels of chemical compositions outside the recommended ranges for galvanizing listed in ASTM A385. Next, galvanized AESS projects will also benefit from additional attention to cut edges. Flame, plasma, or laser cutting increases hardness and alters the diffusion properties near the cut edge, either making it difficult to develop a coating or resulting in a thick coating which is prone to delamination. For all AESS categories, grind thermally cut edges up to $\frac{1}{16}$ inch. Finally, direct communication with the engineer and galvanizer to determine placement, quantity, and size of vent and drain holes in relation to the lifting orientation can help maximize aesthetics without impacting structural integrity.

Duplex Systems

A duplex system involves applying paint or powder coating over the hot-dip galvanized coating to achieve desired aesthetics or increased longevity. ASTM D6386, Preparation of Zinc (Hot-Dip Galvanized) Coated Iron and Steel Product and Hardware Surfaces for Painting, provides the standard practices to prepare galvanized surfaces for painting. Instructions are included for smoothing, cleaning, and profiling the surface based on the identified initial surface condition. Meanwhile, ASTM D7803, Preparation of Zinc (Hot-Dip Galvanized) Coated Iron and Steel Product and Hardware Surfaces for Powder Coating, contains similar practices for powder coating. These specifications list surface conditions, such as zinc runs and rough coatings, which present challenges when the part is duplexed.

Passive Fireproofing

Some passive fireproofing materials require additional preparation to achieve a particular bond strength when applied over galvanizing. For example, intumescent fire-resistive materials (IFRMs) often require a specific primer to promote adhesion over galvanizing. In these cases, the HDG surface should be prepared identically to a duplex system. When applying spray-applied fire-resistive materials (SFRMs) over galvanizing, pre-application of mechanically fastened galvanized metal lath or the use of a bonding agent may be required. Further recommendations will vary by fireproofing manufacturer.

Resources for Hot-Dip Galvanizing Detailing

Most design best practices and steel details necessary for successful galvanizing are readily available and easily adopted from the supporting ASTM specifications referenced throughout this article.

To better navigate and visualize the information contained in these galvanizing standards, the American Galvanizers Association (AGA) publication *Design of Products to be Hot-dip Galvanized After Fabrication* and the National Institute of Steel Detailing (NISD) publication, *Hot-Dip Galvanizing: What We Need To Know*, contain a wealth of practical examples and standard reference tables. Additionally, the AGA publication *Recommended Details for Hot-dip Galvanized Structures* provides working drawings with details for commonly galvanized components.

Early Communication

A basic understanding of the hot-dip galvanizing process, recommended steel details, and a review of the above considerations are key to producing a high-quality galvanized coating. However, do not underestimate the value of discussing elevated standards or unique elements of a project with the galvanizer and fabricator directly. Establishing open lines of communication early on in the design process is the best way to maximize aesthetics for the corrosion protection of AESS members, duplex systems, passive fireproofing, and more. These conversations are worth the extra time upfront to alleviate potential future headaches and will result in the fabrication of structures that will stand strong for decades without maintenance and impress future generations to come.▪

The online version of this article contains references. Please visit **www.STRUCTUREmag.org**.

Alana Hochstein is the Senior Corrosion Engineer for the American Galvanizers Association (AGA), Centennial, CO. (ahochstein@galvanizeit.org)

References

International Lead Zinc Research Organization (ILZRO). *Galvanizing Characteristics of Structural Steels and Their Weldaments*. 1975.

Černý, L., Schindler, I., Pachlopník, R., and Beran, K. *The Influence of Hot-Dip Galvanizing Technology on the Properties of Hot-Dip Galvanized Steels*. Technical University Ostrava, Czech Republic. 2008.

American Institute of Steel Construction (AISC). ANSI/AISC 360 Specification for Structural Steel Buildings, Paragraph J3.2.

American Institute of Steel Construction (AISC). ANSI/AISC 360 Specification for Structural Steel Buildings, Table J3.3.

Research Council on Structural Connections (RCSC), Specification for Structural Joints Using High-Strength Bolts. August 2014 with April 2015 Errata.

American Galvanizers Association (AGA). *Masking Materials for Preventing Hot-Dip Galvanizing*. 2010

American Galvanizers Association (AGA). *Increasing Slip Resistance of HDG Faying Surfaces*. 2018.

American Welding Society (AWS) D19.0, *Welding Zinc-Coated Steel*. 1972.

Miller, Duane K. Sc.D., P.E. *Use Caution When Specifying Seal Welds–Practical Ideas for the Design Professional* by Duane K. Miller. Welding Innovation, Vol. XVI, No. 2, 1999.

American Institute of Steel Construction (AISC). "The New Categorized Approach to Architecturally Exposed Structural Steel: An Overview". *Modern Steel Construction*. November, 2017. **www.aisc.org/globalassets/aisc/aess/all_about_aess_reprint.pdf**

Galvanizers Association of Australia. Advisory Note: *Influence of Thermal Cutting Processes*. July 2011.

Kuklik, Vlastimil and Kudlacek, Jan. Hot-Dip Galvanizing of Steel Structures. Butterworth-Heinemann, Kidlington OX, UK. 2016

Duran, Bernardo. *Edge Flaking of Galvanized Coatings Caused By Flame, Plasma, and Laser Cutting*. American Galvanizers Association Tech Forum. 2014.

American Galvanizers Association (AGA). *Design of Products to be Hot-Dip Galvanized After Fabrication*. 2018. **https://bit.ly/2oRklOh**

National Institute of Steel Detailing (NISD). *Hot-dip Galvanizing: What We Need To Know*. 2009. **https://nisd.org/publications**

American Galvanizers Association (AGA). *Recommended Details for Hot-Dip Galvanized Structures*. 2012. **https://bit.ly/2VeHru5**