Innovative Mid Rise Construction

Steel Stud Walls with Hollow Core Plank Floor System

By Nabil A. Rahman, Ph.D., P.E. and Michael Booth

The use of cold-formed steel (CFS) framing in commercial construction has increased significantly in recent years, as evidenced by a recent report published by the Steel Framing Alliance. Data shows that commercial CFS framing captured 39% of the available applications, with CFS framing used in 81% of all non load-bearing applications and in 23% of structural applications. One major reason for the increased attention in the use of CFS framing is the development of several design standards and design guides by the American Iron and Steel Institute (AISI) covering the design and use of essential framing elements (e.g. Wall Studs, Headers, Trusses, and Shear Walls).

The use of load bearing CFS framing in typical mid-rise construction brings the value of reducing associated construction cost in comparison to other structural framing systems, such as reinforced masonry and structural steel. A key component is the mass of the structure relative to the design of the lateral force resisting system and the foundation. When seismic design governs, the mass of the structure is a key component in calculating the design base shear for the structure. In many instances, the design base shear is significantly lessened with the advent of load bearing CFS framing. The foundation design also is positively affected with reduced costs associated to the mass of the structure and its end reactions. The critical path/construction schedule is also reduced, potentially as much as 120 days dependent on the size and type of the structure. All of these features positively impact any project related to the total construction cost.

The cold-formed steel Stud-Plank system is a load bearing configuration combining two highly acceptable building methods, precast hollow-core concrete slabs resting on light steel framing stud walls (*Figure 1*). The system, ideal for low and mid-rise construction (up to 8-story height), covers a wide range of building usage, including apartment buildings, office buildings, health care facilities, hotels, schools, and dormitories. Layout direction is dependent on the structure's footprint.

Figure 1: A 4-story building using CFS stud walls supporting precast hollow core concrete planks

Often design layout includes load bearing separation walls, with corridors maintaining the same direction with lentils spanning the corridors at the ends of the bearing wall locations. The corridors and exterior walls are then non load bearing walls with the exterior framing addressing the wind pressure only.

Floor Systems Appropriate For CFS Mid-Rise Construction

Several types of floor systems can be integrated with CFS stud load bearing walls. Among these floor systems are the composite steel deck-concrete slabs, wood joists/trusses with wood floor diaphragm, CFS joists or open bar joists with concrete or wood floor diaphragm, and the hollow-core concrete planks.

Figure 2: A composite steel deck-concrete slab supported by CFS stud walls

Composite steel deck-concrete slabs (*Figure 2*) combine the structural advantage of a reinforced concrete slab with the time saving advantage of a permanent form. The steel deck furnishes the total bottom reinforcement of the composite slab, while additional top reinforcement is required. Due to the composite action between the concrete and the steel deck, the slab can support a greater floor live load than a typical reinforced concrete slab of the same depth. The steel deck is typically spot-welded to the top track of the wall panel.

The wood joist/truss system (*Figure 3*) enables clear spans up to 28 feet for a 16-inch deep system. However, the use of this system necessitates in-line framing between the joists/trusses and wall studs to ensure transfer of gravity loads to the wall studs without eccentricity. The wood floor system, however, is a combustible material that may not be permitted by building codes for certain types of construction.

The CFS joist system with concrete or wood floor diaphragm is a non-composite system that is significantly lighter than all other floor systems. The joists are typically 8 to 14 inches deep. Relatively sizeable CFS joists (97 mils thick and 14 inches deep) can accommodate clear spans up to 30 feet. End and intermediate supports of

Figure 3: Wood trusses floor system supported by CFS stud walls

CFS joists require bearing stiffeners to prevent the crippling of their webs under the effects of heavy support reactions. CFS joists require lateral bracing, or blocking, to prevent the lateral torsional buckling mode of its compression flanges.

Pre-cast hollow-core concrete slabs (*Figure 4*) provide the advantages of high stiffness-to-weight ratios and rapid field installation. The hollow-core planks can be installed at a rate up to 5,000 square-feet in a single day. The planks are typically produced in 6-, 8-, 10-, 12-, and 16-inch depths. The hollow-core floor system provides the longest design spans amongst all other systems meeting the requirements of CFS mid-rise construction. However, factors such as concentrated loads and large openings can affect the span capabilities of the system. Sound Transmission Class (STC) rating and fire resistance rating typically meet the most stringent design criteria.

Figure 4: Precast hollow-core concrete planks supported by CFS stud walls

Advances in CFS Load Bearing Wall Systems

Load Bearing Studs

The most currently used wall stud shape is the standard C-shaped stud with one lip stiffener, which is available in sizes 2½ up to 12 inches. This standard stud shape is not the most efficient in load bearing applications, since the flat web element of the stud typically has a high width-to-thickness ratio and tends to buckle locally at a stress level well below the yield limit of the steel material.

To estimate the axial load capacity requirements for CFS studs in a mid-rise load bearing construction project, consider a 5-story building project that uses CFS wall studs supporting a hollow-core plank floor system. If the total gravity load acting on each floor level is assumed at 125 psf, the load bearing walls are 6 inches wide, 9 feet high (braced laterally at mid height) and are located every 24 feet, and the stud spacing in the wall is 16 inches on center, then the estimated axial load acting on each stud at the ground floor level of this building is approximately 20,000 lbs. It would not be possible to find a single standard 6 inch C-shaped stud section that could be used to support this axial load. A CFS design engineer may select to double the standard C studs at each stud location to meet the load capacity requirements. However, this solution adds more material and cost to the project, and requires additional attachment of the two studs together using welding or screws.

To satisfy the market demand for a stronger stud to be used in CFS load bearing applications, the main goal has been to increase the stud's axial strength-to-weight ratio. To achieve this goal, several innovative techniques have been generated by stud manufacturers resulting in new stud cross-sections that are more effective in axial compression than the standard C-shaped stud:

- The introduction of additional bends in the web of the stud's cross-section break the width of the thin web into smaller widths, resulting in a higher local buckling stress and consequently reducing the tendency of the cross-section to buckle prior to reaching its yield limit.
- The introduction of longitudinal ribs in the stud's cross-section stiffens the stud section and increases its overall local buckling stress.
- Expanding the dimensions of the flanges and lips of the stud and adding additional stiffening lips adds effective area to the cross-section, thereby increasing its load capacity.

continued on next page

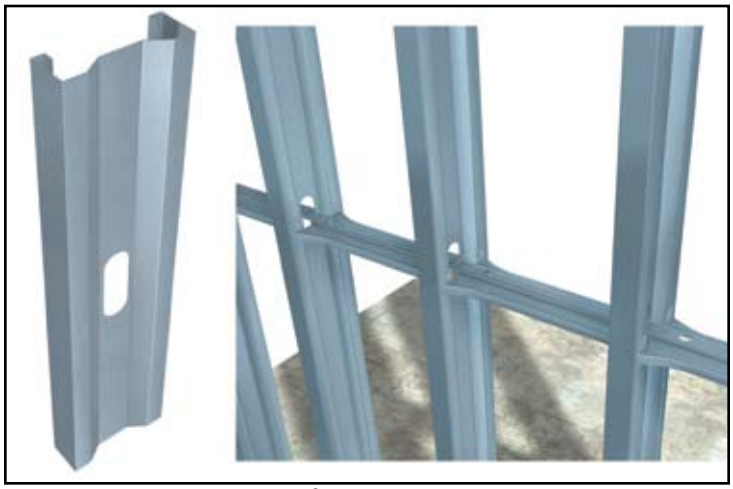

Figure 5: Load bearing SigmaStud® and lateral bracing BuckleBridge™

- Using higher strength material (50 ksi to 70 ksi) to fabricate the stud also increases its load capacity.

Figure 5 shows an example of a newly developed load bearing stud that features additional web bends, extended flange width up to 3 inches, a second return lip, and 50 ksi steel material.

Lateral Bracing

The current AISI Wall Stud Design Standard requires CFS load bearing stud walls to be braced laterally at intermediate points to restrain the studs against lateral and torsional buckling. The typical spacing between bracing rows is 4 or 5 feet. The AISI Standard calls for a design force of the intermediate bracing of 2% of the design axial compression load in the stud. This bracing design force is cumulative since each stud contributes the same force to the bracing member; therefore, bracing needs to be periodically anchored to dissipate this force. For the 5-story building used as an example above, a bracing force of 3,600 lbs needs to be resisted by the lateral bracing member at the anchorage point if anchorage is provided every 24 feet.

The standard lateral bracing method for load bearing stud walls involves using flat straps that are either welded or screwed to the studs. The straps act in tension only; therefore, shear blocks must be installed between studs at intervals to resist torsional effects of the studs. Another bracing method is to provide a compression member, rather than a tension member, to resist the lateral bracing force, such as the use of solid blocking between studs. *Figure 5* shows an example of a bracing compression member. This product has an elongated tab at one end that locks into a slot at the other end through the stud punchout for initial installation. The installation is then secured through screw attachment to each stud.

Shear Walls

Two typical shear wall systems are commonly used with CFS load bearing stud walls; the X-brace flat strap system and the sheathing braced system. The X-brace flat strap system provides pre-determined load path for the lateral shear forces, and therefore requires vertical stacking of the shear walls to ensure the load transfer to the foundation. Corner anchorage of the X-brace system must be checked against uplift reactions, and the diagonal straps needs to be slightly pre-tensioned to eliminate any slack during installation. The sheathing braced system can be achieved using structural wood panels or sheet steel, both attached to the steel studs based on a designed screws spacing at panel edges and anchorage to the floor slab.

Connection Details of the Stud-Plank System

Detailing of the connections between the hollow-core planks and the CFS stud wall requires special consideration. A minimum seating/bearing width of 2 to 2.5 inches is required for the planks on top of the stud wall as recommended by the Precast/Prestressed Concrete Institute (PCI). A minimum of 6-inch width wall framing can accommodate the required plank seating width.

To provide the vertical continuity between the wall and floor systems, a typical connection detail is to weld embedded vertical splice plates (key-way plates) to the top track of the CFS stud wall at intervals of 32 to 48 inches. It is recommended that the thickness of top tracks of the stud walls to be a minimum of 54 mils (16 ga) to facilitate welded connections. Minor Rebar reinforcement is used parallel to the wall along the joints of the planks and through the punched holes of the splice plate prior to grouting in the floor system to ensure the horizontal continuity between the planks (*Figure 6a*). Another method of providing the vertical continuity is by using through-bolts that are anchored to the tracks of the bottom and top stud walls prior to grouting (*Figure 6b*).

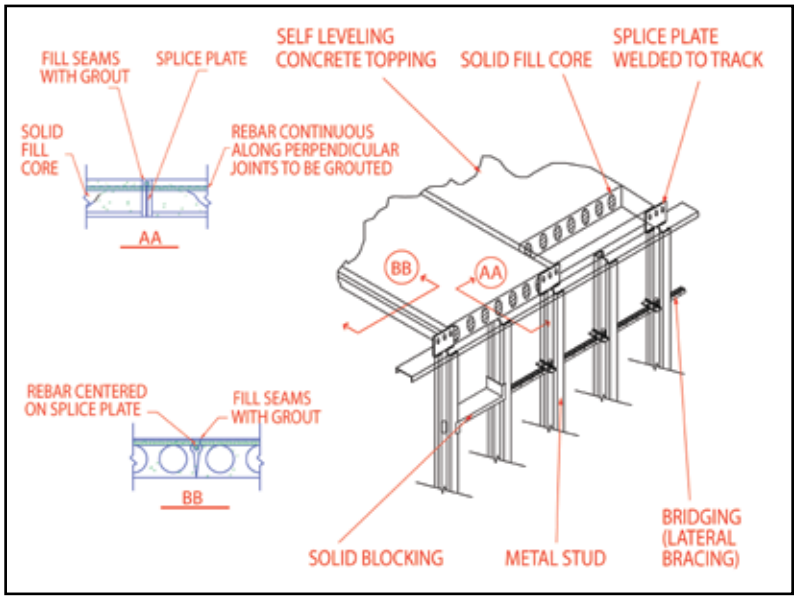

Figure 6a: Detail of Planks-Interior Bearing Wall Installation

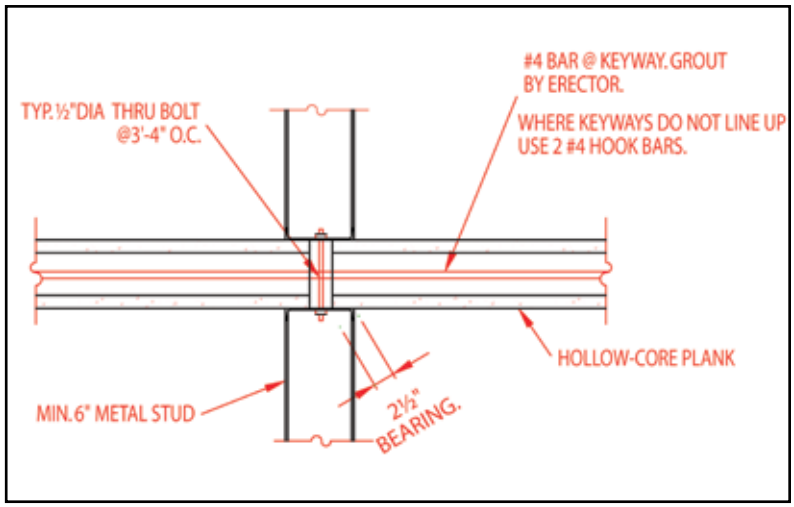

Figure 6b: Detail of Planks-Interior Bearing Wall Installation

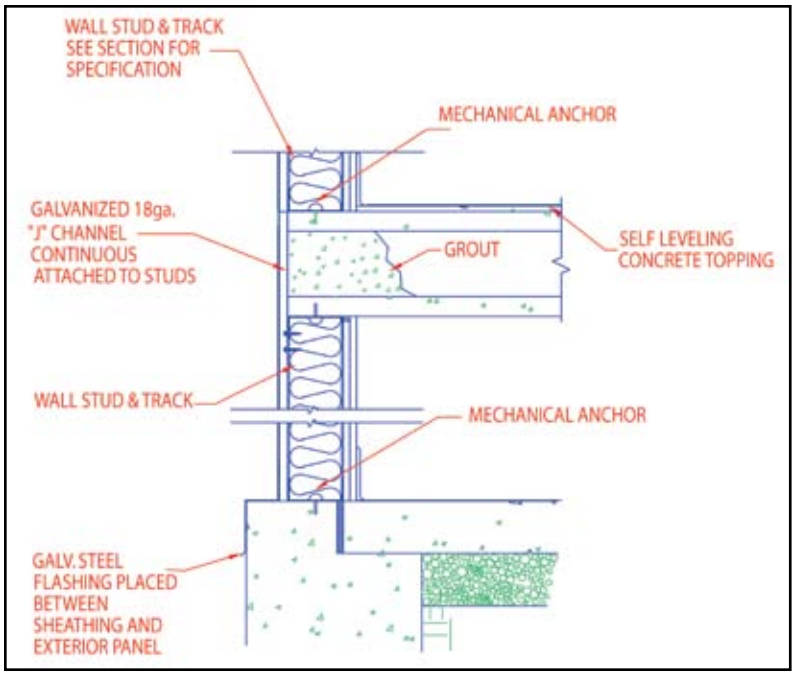

Figure 6c: Detail of Exterior Bearing Wall with Planks - core grouting

The core of the planks at the stud wall bearing locations needs to be filled with grout in order to ensure that the planks do not crush under the axial bearing load of the studs (*Figure 6c*). If the tracks of the stud walls are designed to uniformly distribute the axial loads along the plank (this requires thicker/stiffer tracks), then grout may not be needed. In addition, care must be taken to deal with any extra camber of the planks at non-bearing stud walls. This extra camber can be dealt with by using slip connections at the non load bearing wall location.

Conclusions

Innovations in the use of load bearing CFS framing provide a greater range of suitable applications in mid-rise construction. As a result of recently developed CFS products, stud service loads capacities are significantly increased and engineered solutions are now available to address other design issues such as lateral bracing, shear walls, and connection details. The overall impact of using CFS load bearing wall framing to project construction cost extends beyond simply the relative cost of wall construction materials compared to other traditional materials. The impact additionally affects the design of the foundation system, the lateral forces resisting system, and the construction schedules, including the associated costs of general administrative fees. Insurance benefits, a reduction of interest expenses and an accelerated revenue stream for the developer can be realized. All these attributes would service the project, through the design and construction teams, with a greater value.▪

Nabil A. Rahman, Ph.D., P.E. is the Director of Engineering & Research for The Steel Network, Inc. Dr. Rahman currently serves as the Chairman of the Wall Stud Task Group of the Committee on Framing Standards (COFS) of the American Iron and Steel Institute (AISI). He is also a member of the ASCE-SEI Committee on Cold-Formed Steel as well as the AISI Committee on Specification. Dr. Rahman can be reached via e-mail at ***nabil@steelnetwork.com***

Michael Booth is the Director of Project Management at The Steel Network, Inc. Mr. Booth has held the titles of Regional Sales Manager and National Manager of Technical Services, in addition to 20+ years experience within the construction industry. Mr. Booth can be reached via e-mail at ***mbooth@steelnetwork.com***