AISI Committee on Framing Standards

Removing the Guesswork from Cold-Formed Steel Framing Design

By Roger A. LaBoube and Jay W. Larson

How many times have you or a colleague lamented that cold-formed steel design is complex and not clearly defined?

Well, in 1997, the AISI Construction Marketing Committee responded to this common complaint by authorizing the formation of the Committee on Framing Standards (COFS). This was done due to the increased interest in cold-formed steel for residential and light commercial framing (*Figure 1*), and the sense that there were a number of design issues that were not being adequately addressed for this emerging market.

"To develop and maintain consensus standards for cold-formed steel framing…"

The COFS established as its mission: "To eliminate regulatory barriers and increase the reliability and cost competitiveness of cold-formed steel framing in residential and light commercial building construction through improved design and installation standards." The committee also established as its primary objective: "To develop and maintain consensus standards for cold-formed steel framing, manufactured from carbon or low alloy flat rolled steel, that describe reliable and economical design and installation practices for compliance with building code requirements."

The COFS organized itself under the same ANSI-approved operating procedures that govern the Committee on Specifications. These procedures provide for balance between producer, user and general interest categories; voting, including the resolution of negatives; public review, interpretations and appeals. Numerous task groups have been added under various subcommittees; however, the main committee always maintains control of all decisions through the balloting process.

By no means has the COFS completed its mission. It continues to improve the existing standards and develop new standards and design support documents. For example, in 2004 and 2005, the COFS developed standards for *Wall Stud Design* and *Lateral Design*, and issued an industry Code of Standard Practice.

General Provisions

The *Standard for Cold-Formed Steel Framing Design - General Provisions* addresses those things that are common to prescriptive and engineered design. It provides a link between all of the industry stakeholders and code enforcement agencies, ensuring that everyone is "on the same page" with respect to the basic requirements of cold-formed steel framing. It provides general requirements for material, corrosion protection, products, member design, member condition, installation, and connections.

continued on next page

Figure 1: Residential Cold-Formed Steel Framing. Photo courtesy Dietrich Metal Framing--a Worthington Industries Company.

The *General Provisions* includes such information as the importance of ensuring that wall studs have square cut ends and are seated tight and square against the tracks, in order to provide for adequate transfer of forces. The maximum gap tolerance of ⅛-inch is specified by the *General Provisions*, is based on accepted industry practice and is not required for nonstructural walls. The Committee is currently considering adding cautionary language to the *General Provisions Commentary* on the application of this tolerance based on a recent study at the University of Missouri-Rolla.

There were two significant changes included in the 2004 edition of the *General Provisions* standard: cutting and cut edge protection, and alignment framing tolerances.

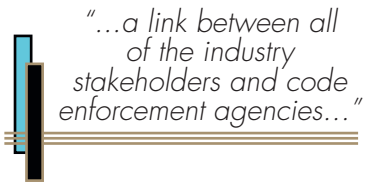

Regarding cutting and edge protection, in the section on materials, the standard now states, "Additional corrosion protection is not required on edges of metallic-coated steel framing members, shop or field cut, punched or drilled." In the section on cutting and patching, the standard now requires that "All cutting of framing members shall be done by sawing, abrasive cutting, shearing, plasma cutting or other approved methods." These two provisions really go hand-in-hand, and recognize zinc's ability to protect steel galvanically at cut edges when proper cutting techniques are employed.

Regarding alignment framing tolerances, based on testing at the University of Waterloo, there is now an additional limitation to address those cases where a bearing stiffener is located on the backside of a floor joist. The previous limitation alone, that "each joist, rafter truss and structural wall stud shall be aligned vertically so that the centerline (mid width) is within ¾-inch (19 mm) of the centerline (mid width) of the load bearing member beneath," could result in a significant misalignment in the load path, as shown in *Figure 2*.

The new limitation prescribes a maximum distance of ⅛-inch (3 mm) from the web of the horizontal framing member to the edge of the vertical framing member, as well, when a bearing stiffener is located on the backside of the horizontal framing member.

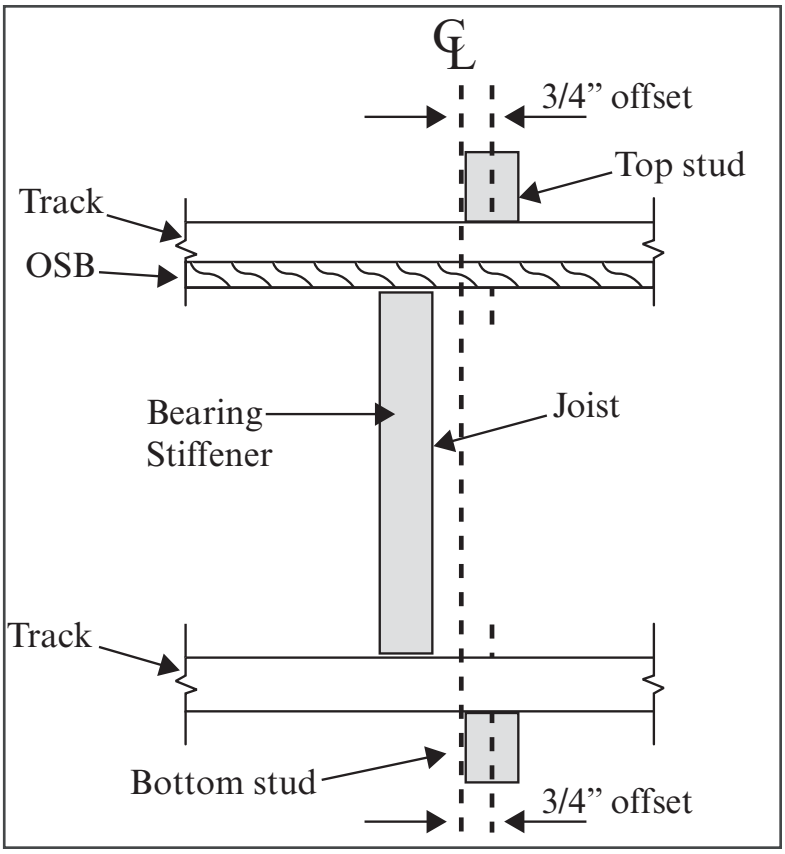

Figure 2: Potential Misalignment in Load Path

Truss Design

The *Standard for Cold-Formed Steel Framing - Truss Design* applies to cold-formed steel trusses used for load carrying purposes in buildings. Without such a document, the industry would be at a significant disadvantage with respect to competitive materials. The Truss Standard is actually not just for design - it also applies to manufacturing, quality criteria, installation and testing as they relate to the design of cold-formed steel trusses. The requirements of the truss standard apply to both generic C-section trusses and the

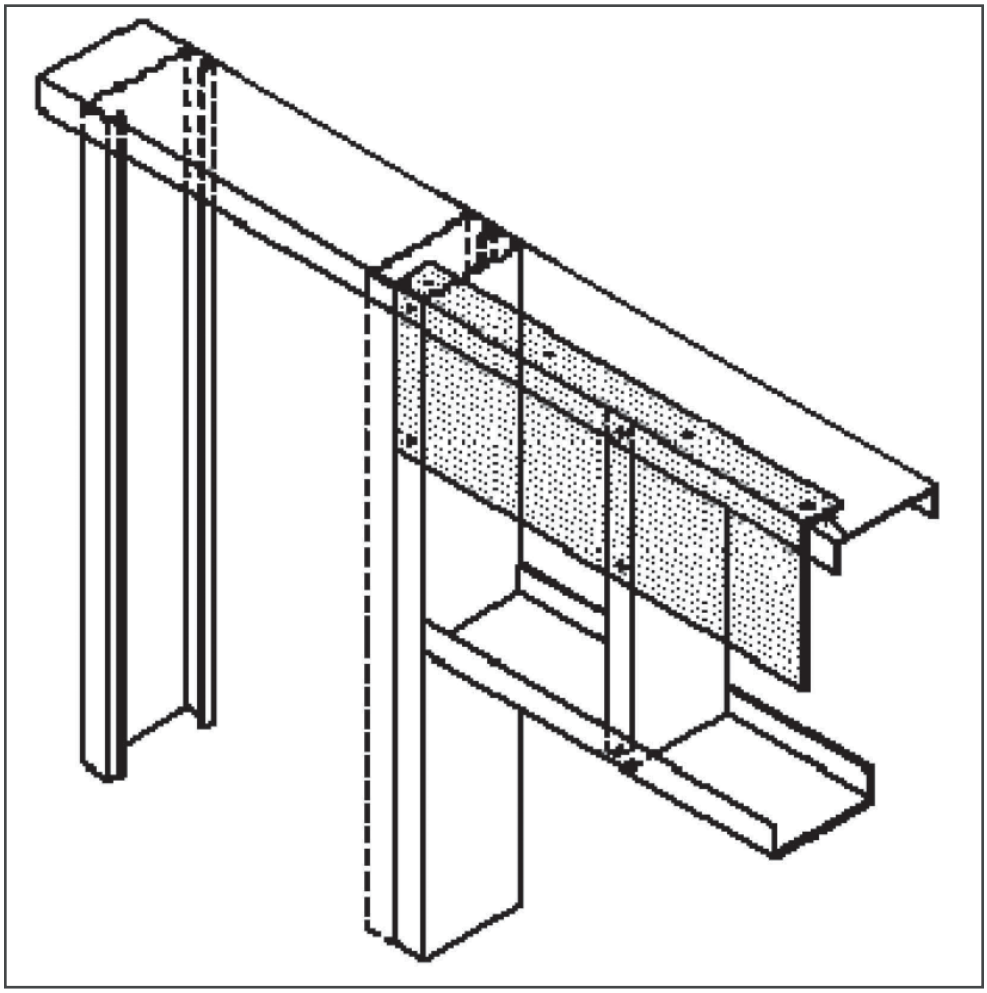

Figure 3: Single L-Header

various proprietary truss systems and were developed, in part, based on extensive research at the University of Missouri-Rolla.

For the 2004 edition, the *Truss Standard* was revised to recognize the Load and Resistance Factor Design (LRFD) method. This was not included in the previous edition because the industry is still heavily rooted in Allowable Strength Design (ASD). However, with the elimination of the ⅓ stress increase from ASD, the industry feels that there may now be more compelling reasons to use LRFD.

Header Design

The *Standard for Cold-Formed Steel Framing - Header Design* is aimed at giving design professionals the tools they need to design headers over door and window openings in buildings. Three header configurations are addressed by the *Header Standard*: back-to-back, box and L-headers. The design methodologies are based on testing at the NAHB Research Center, the University of Missouri-Rolla and industry, and were developed under the guidance of Dr. Roger LaBoube of the University of Missouri-Rolla. The *Header Design* standard provides general, design and installation requirements. A key aspect of the design provisions is the recognition that these headers are assemblies, and thus to achieve optimum strength and economy, the headers must be designed as assemblies.

The only substantive change to the *Header Standard* for 2004 was the addition of single L-headers, shown in *Figure 3*. Based on testing at the NAHB Research Center, single L-headers will be allowed for openings up to 4 feet wide. The design methodology is very similar to that for double L-headers, except that specific limitations are defined based on what was tested.

Conclusions

The American Iron and Steel Institute has effectively leveraged its experience and expertise in standards development to support the growing needs of the cold-formed steel framing industry.

The COFS documents are readily available from the American Iron & Steel Institute (**www.steel.org**) and the Steel Framing Alliance (**www.steelframingalliance.com**).

A subsequent article will provide an overview of the remaining standards. These documents address wall stud design, lateral design, code of standard practice, and prescriptive design.▪

Roger A. LaBoube is Director of the Wei-Wen Yu Center for Cold-Formed Steel Structures on the campus of the University of Missouri-Rolla, Rolla, MO. He can be reached at ***laboube@umr.edu****. Jay W. Larson is Director, Construction Standards Development, for the American Iron and Steel Institute, Washington, D.C. He can be reached at* ***jlarson@steel.org****.*

Acknowledgements

The members of the committee, subcommittees and task groups responsible for bringing these standards to fruition are to be commended for their time and effort. It is through the participation of representatives from steel producers, fabricators, users, educators, researchers, and building code officials in this consensus process that such progress is made. The partner organizations, Steel Framing Alliance, Light Gauge Steel Engineers Association, Steel Stud Manufacturers Association, Canadian Sheet Steel Building Institute and Center for Cold Formed Steel Structures, are to be thanked for their active participation.▪