Lateral Support of Wood Beams in Residential Structures

By Gary Schweizer, P.E.

Lateral support from a designer's perspective is easy – provide *direct* restraint to the compression edge of a member. In reality, direct lateral restraint is often missing in residential framing today. An engineer should carefully review the field conditions to ensure that lateral support conditions match design assumptions. Member selection can be significantly altered by lateral stability considerations. As an example, architects and builders often construct homes with dropped beams or headers within walls. These beams are not *directly* restrained from buckling. Complicating matters are the high loads, large spans, construction inequities, etc; which may yield high buckling forces and dangerous conditions (*Figure 1*).

Figure 1: Garage door header with 1-inch lateral deflection (assumed lateral support not achieved).

What Constitutes 'Direct' Lateral Support?

Lateral restraint of a beam's compression edge is required to prevent premature buckling. The buckling force generated by a beam is similar to standard column analysis and is linked to the Euler buckling formula. Longer beams and heavier loads yield higher buckling forces.

AF&PA's *National Design Specification® (NDS®) for Wood Construction* Section 3.3.3.4 provides engineering guidance on the effect of lateral support with regard to flexural stress adjustments. In essence, full flexural design values are allowed for beams that are properly restrained from buckling.

Typical restraint is afforded to beams by direct sheathing attachment (*Figure 2*) or by perpendicular framing that is tied to the beam (*Figure 3*). Restraint must be sufficient to restrict lateral buckling in both directions. Additionally, restraint must be placed at a frequency that assures continuous lateral support. Sheathing nail spacing at ≤ 12 inches on-center, or perpendicular faming at ≤ 24 inches on-center, typically constitutes continuous lateral support.

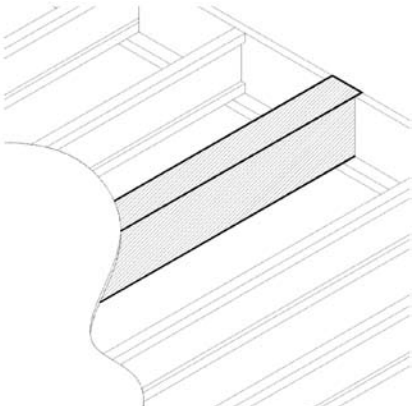

Figure 2: Sheathing/nailing provides lateral support.

Lateral Support Issues

Beams are often used in applications requiring bending design value adjustment for less than full lateral support. Flexural design value reductions are calculated factoring in the beam's slenderness ratio, material variability, and the distance between points of lateral bracing. Beam slenderness ratios are capped at 50 (similar to long column analysis).

Figure 4 (page 40) shows an open beam with lateral support at 10 feet (i.e. no sheathing or perpendicular framing is available on the left side of the beam). This beam needs to be analyzed with an unbraced length of 10 feet; therefore, the reference bending design value needs to be reduced to account for this non-continuous lateral support condition.

Unfortunately, lateral stability is not always as clear as indicated. Dropping wall beams or headers below the roof and floor levels complicates lateral support. Are exterior wall sheathing panels (parallel to the beam) and pony wall studs (above the beam) sufficient to garner lateral support? As presented in *Unbraced Headers: Lateral Buckling Design Considerations* (Wood I-Joist Manufacturers Association, **www.i-joist.org**) researchers have determined that lateral support is not afforded by wall sheathing unless the beam is less than 12 inches in depth. In essence, the wall sheathing provides some lateral support, but only enough to properly brace beams less than 12 inches in depth. Larger beams, with larger bending capacities and therefore higher buckling forces, are not restrained by wall sheathing and pony walls. It is therefore recommended that these beams be designed for an unbraced length equal to the span, or that the beam be moved up in the wall (directly below the floor or roof line) to acquire full lateral support. The Wood I-Joist Manufacturers Association (WIJMA) has developed a dropped header design

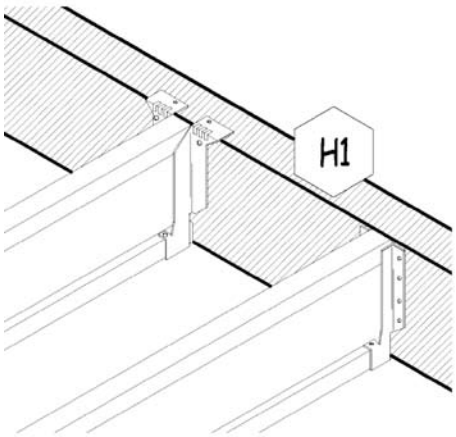

Figure 3: Face mount hangers provide positive lateral support.

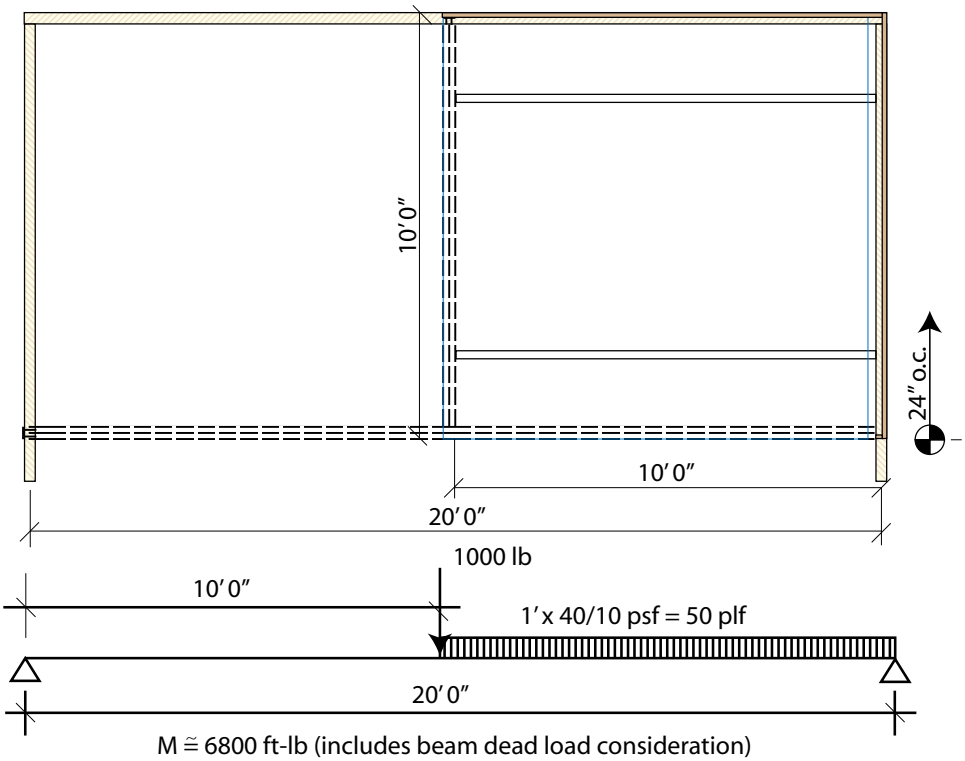

Figure 4: Lateral support of the beam is provided by the intersecting beam at midspan and the floor decking on the right side.

guide and related slide presentation that provides recommendations for engineered wood products used in this application.

A common application that needs additional design attention is a garage header. *Figure 5* shows an application that needs to be analyzed with an unbraced length of 18 feet. In this example with a 30 psf live load (1.15 load duration factor), 15 psf dead load, 24-foot building width (12-foot tributary load), and carrying roof and ceiling load only, a 2-ply 1¾ x 16-inch Microllam® LVL header (2600Fb-1.9E) would be required to span 18 feet, assuming full lateral support. A 3½ x16-inch wide Parallam® PSL header (2900Fb-2.0E) would be required under these same conditions when you factor in the unbraced length of 18 feet. This illustrates the need to increase flexural capacity due to consideration of limited lateral support. Also noteworthy is the benefit of a wider homogenous section with regard to buckling.

Compounding Issues

Several issues may further complicate buckling of beams:

Construction Issues – Framers can inadvertently compound buckling concerns by installing a beam out of plumb (uneven bearing surface or warped beam) or by introducing a bow along the length of the beam. This naturally affects the Δ part of the buckling (P-Δ) effect.

Loading Location – Eccentric loading can further complicate beam buckling analysis by creating a twisting or torsional force, which can accent beam buckling due to vertical loads. Large concentrated loads may have substantial torsional effects.

Brick Lintel – Brick lintels are typically supported by steel angles which in turn are bolted into wood beams. Brick arching may remove some of the load transferred to the beam, but the remaining brick load is carried by the composite beam. The brick load is introduced torsionally on the beam and, again, will compound buckling due to vertical loads.

Braced Wall Provisions – Several jurisdictions have accentuated buckling issues by combining wall bracing requirements (prescriptive shear walls) with continuous garage headers. International Code Council (ICC) provisions limit prescriptive solutions to simple span headers that are 18 feet maximum (plus the widths of the braced wall segments). *Figure 6* (page 42) illustrates that a continuous beam is not recommended for this application due to lateral stability concerns. The correct design procedure would be to create 2 simple spans and provide king studs at both ends of each beam (*Figure 7, page 42*).

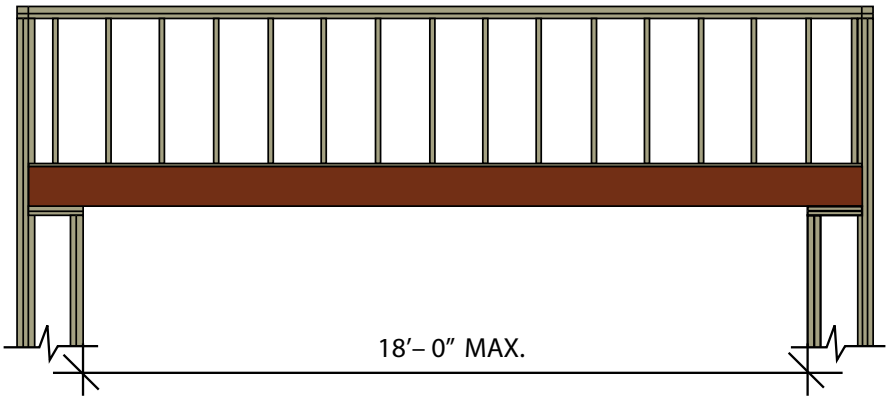

Figure 5: Pony wall and wall sheathing do not provide lateral support for this 2-ply dropped header condition; 3½ x 16-inch wide Parallam® PSL header (2900Fb-2.0E) is required.

continued on next page

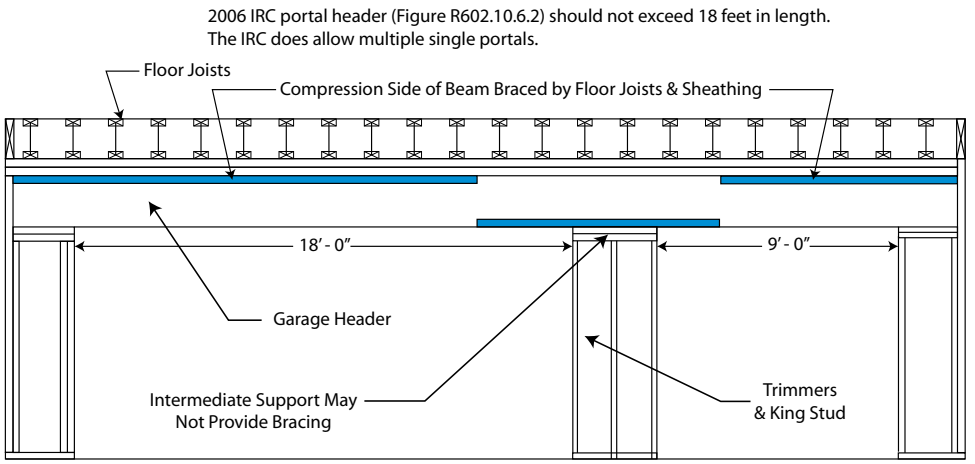

Figure 6: Prescriptive portal frame does not provide lateral bracing with continuous header over multiple openings.

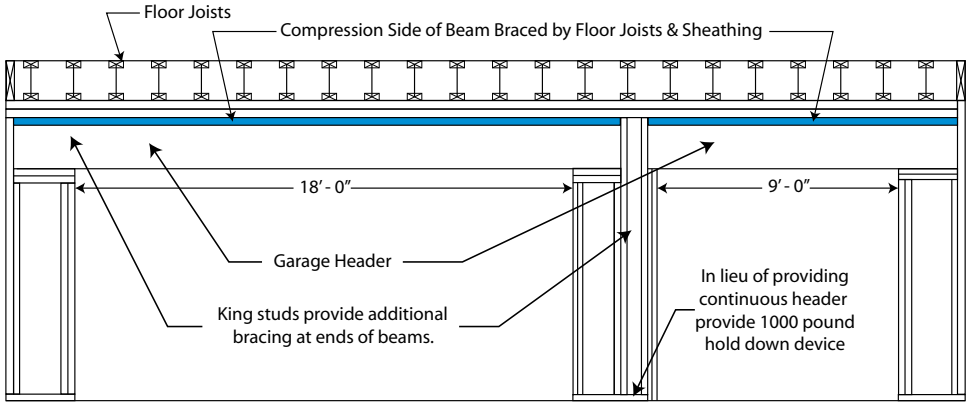

Figure 7: Prescriptive shear brace provisions are restricted to simple spans ≤ 18 feet.

Conclusion

Lateral support is an extremely important aspect of structural design. Present framing practices often violate lateral support assumptions – using dropped beams or headers, or when bracing is inadequate or misplaced, etc. An engineer should ensure that the location of beams and joists are clearly identified so that the lateral support assumed in design is assured. Member design must account for the reduced flexural capacity when continuous lateral support is not provided; and, where necessary, bracing should be designed to resist buckling forces. Finally, recall that wider homogenous beams will enhance the buckling resistance when compared to built-up, multi-ply beams.▪

Gary Schweizer, P.E. is employed as a structural engineer for iLevel by Weyerhaeuser. He is presently senior engineer for the eastern United States and is responsible for technical support on residential applications involving engineered lumber products. Mr. Schweizer formerly worked as consulting engineer on a wide variety of structural engineering projects.

Reprinted with permission from *Wood Design Focus*, Fall 2007.