Structural Design

design issues for structural engineers

Waterfront Crane Runways

Common Omissions and Practical Solutions

By Vitaly B. Feygin, P.E.

Modern container terminals are designed with two main functions in mind: to provide a loading/unloading area for ship containers and to support lifting devices that can move loads from one location to another. Design of the supporting structure for crane operation is an intricate task that affects other components of a modern pier. Engineers designing a crane runway should take into account possible future changes in the crane load rating, the potential addition of another crane, a future extension of the crane runway, the accidental ramming of the crane against the crane stops, an extreme range of loads and/or a high incidence of maximum loads.

In general, a waterfront crane runway is designed as a beam on an elastic foundation, where piles are treated as elastic springs. In recent years, there were some attempts made to design crane girders using the Strut-and-Tie Model (STM) methodology. Utilization of STM for the design of waterfront crane girders may have questionable benefits requiring a separate discussion. This article will concentrate on simple design issues that are often neglected and are typically investigated only after the destruction of expensive property.

Design of Crane Stops

Frequently, design of the crane stop is treated without due respect. Many engineers use salvaged crane stops, relocating them in a new position along the crane runway. Such decisions can become very costly mistakes.

Crane stops are controlled by boundary conditions identified in the energy equation and the tipping force equation (*Figure 1*). The crane stop should be designed for the larger of the two forces.

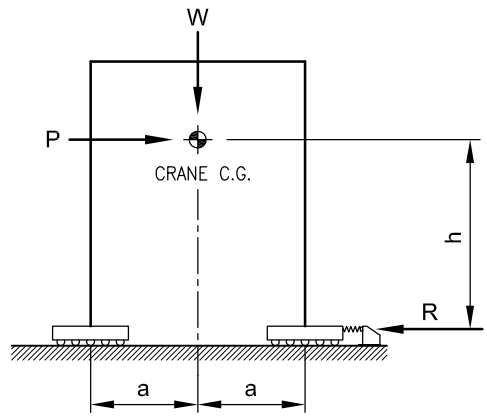

Figure 1: Free body diagram for crane tipping force equation.

Energy Equation

Kinetic energy of the crane at full rated speed must be equal to the energy dissipated by a spring or plunger in the crane stop device.

$WV^2/2g = P\delta$ (*Equation 1*)

Where W = total weight of the crane excluding the lifted load, V = rated speed of the crane, g = acceleration due to gravity, δ = length of spring or plunger travel required to stop the crane (usually about 0.25 ft), and P = force of impact.

Tipping Force Equation

$aW = Ph$ (*Equation 2*)

Where W = crane dead weight, a = horizontal distance from the crane tipping point to the crane's center of gravity (C.G.), and h = vertical distance from the point of impact to C.G. of the crane.

Example

Energy Equation: W = 2,400 kip, V = 2.5 ft/sec, δ = 0.25 ft, $P = 2{,}400*2.5^2 / (2*32.2*0.25) = 931$ kip/per two stops or 465 kip per stop

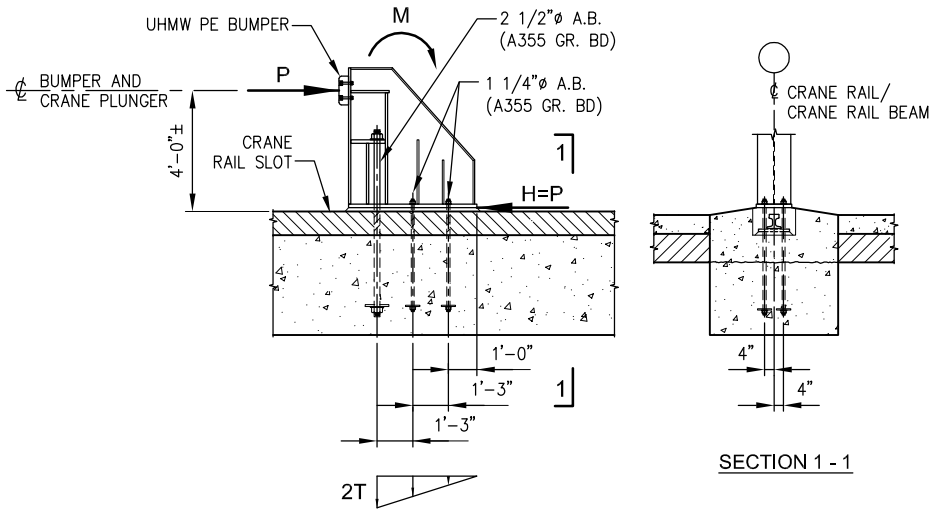

Figure 2: Crane stop detail (not recomended for heavy cranes).

Vitaly B. Feygin, P.E. is a principal structural engineer with Marine and Industrial Consultants, with offices in Baltimore and Tampa. He is the author of two patents related to sea walls, composite cofferdams, bridge fenders and port structures. He may be reached at ***vfeygin.mic@gmail.com****.*

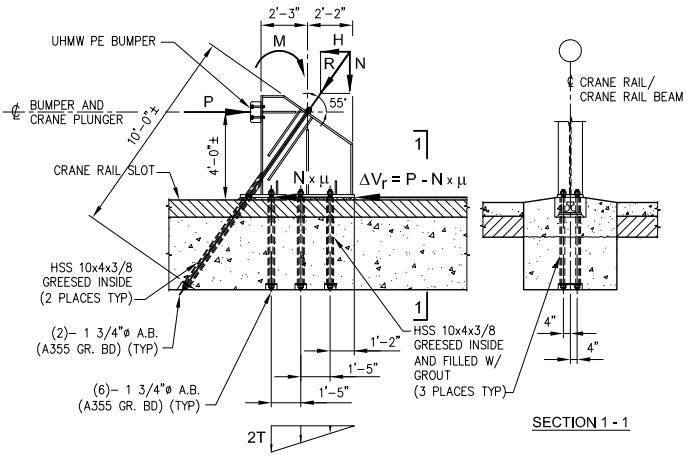

Figure 3: Alternate crane stop detail.

The Tipping Force Equation: W = 2,400 kip, a = 44 ft, h = 80 ft, P = 2,400*44/80 = 1,320 kip/per two stops or 660 kip per stop

In ideal conditions, the force of crane impact is shared equally between two crane stops. However, in the real world, crane frames are skewed. The force of the crane impact is almost never shared equally by both crane stops. Therefore, prudent design would require each crane stop to be designed for an impact force that is 20% higher than the force calculated from an assumption of equal force distribution; i.e., 60% of the total impact force.

Consider a commonly used crane stop detail (*Figure 2*). The force of the crane impact is an ultimate load and should be treated as such.

Shear force on the bolt group, V = 0.6*1,320 = 792 kip
Moment, M = 792 kip*4 ft = 3,170 kip-ft

The detail shown in *Figure 2* uses two 2½-inch-diameter bolts and four 1¼-inch-diameter bolts for tension and shear. Without an oversized hole in the base plate, shear force will be shared proportionally to the shear stiffness A_bG of each bolt.

Therefore, two 2½-inch (A_b = 4.91in^2) bolts will resist twice the force resisted by four 1¼-inch bolts (A_b = 1.22 in^2).

f_v = 792*0.66 / (2*4.91) = 53.20 ksi/bolt > $\phi_v F_v$ = 0.75*0.4*Fu = 0.75*0.4*150 = 45 ksi–@ 2½-inch ϕ bolts (*Table J3.2, AISC 13*)

f_v = 792*0.33 / (4*1.22) = 53.55 ksi/bolt > $\phi_v F_v$ = 0.75*0.4*Fu = 0.75*0.4*150 = 45 ksi–@ 1¼-inch ϕ bolts

Tension on the bolt group.

3,168 = 2*T*3.5+2*T*2.25/3.5+2*T*1/3.5

T = 358 kip

Combined Tension and Shear in Bearing Type Connection

$F'_{nt} = 1.3F_{nt} - F_{nt}*f_v/(\phi F_{nv})$ (*F-la J3-3a, AISC 13*)

This formula is losing physical meaning since f_v exceeds $\phi_v F_v$

T/A_b =358/4.91 = 72.91 ksi (Front Bolts are greatly overstressed.)

$0.64T/A_b$ = 229/1.22 = 188 ksi (Middle Bolts are greatly overstressed.)

$0.285T/A_b$ = 102/1.22 = 84 ksi (Exterior Bolts are greatly overstressed.)

Now consider a modified connection (*Figure 3*). The force of the impact is taken into horizontal and vertical components of diagonal tension rods, (with the balance of force resisted by the base plate anchor bolts). For this connection, use all 1¾-inch-diameter rods (A_b = 2.40 in^2).

Two diagonal rods running at a 55 degree angle to horizontal will be post-tensioned to 0.8fpu = 0.8*150*2*2.4 = 576 kip.

Moment resistance provided by the diagonal tension rods: M'_r = 576*0.574*4.0 +576*0.819*2.17 = 2,346 ft-kip

Shear resistance provided by the diagonal tension rods: $V'_r = N*\mu$= 576*0.819*0.7= 330 kip

ΔM_r = 3,168 – 2,346 = 822 ft-kip

ΔV_r = 792 – 330 = 462 kip

f_v = 462/(2 *3*2.4) = 32 ksi / bolt < $\phi_v F_v$ = 0.75*0.4*Fu = 0.75*0.4*150 = 45 ksi

The tension on the bolt group is:

822 = 2*T*4.0+2*T*2.58/4.0+2*T*1.17/4.0 T = 83.3 kip

$F'_{nt} = 1.3F_{nt} - F_{nt}*f_v/(\phi F_{nv})$ = 1.3*0.75*150 – 0 .75*150*32/45 = 66.25 ksi < F_{nt} =.75*150 = 112.5 ksi

T/A_b = 83.3 / 2.4 = 34.71 ksi < $\phi F'_{nt}$ = 0.75*66.25 = 49.7 ksi.

While the detail shown in *Figure 2* fails at a load well below the required limit, the detail shown in *Figure 3* has significant extra capacity.

Design of Stowage Devices

Both tie-downs and stow pins should be designed for hurricane wind force only; these devices are not intended for seismic events, which are unpredictable in time such that it is impossible to stow a crane in advance. It should be remembered that the wind force can be acting at an angle to the crane, which makes it difficult to determine the actual percentage of the force acting on each of four tie-downs. However, each of the two stow pins should be designed for 50% of the total force.

Tie-downs

There are two general schemes for tie-down design:

- Case 1: Tie-down device is symmetrical to the centerline of the rail (*Figure 4*).
- Case 2: Tie-down device is placed on one side of rail (*Figure 5, page 36*).

In both cases, tie-downs create torsional moment in addition to shear and flexure. Even though it is minimal in Case 1, torsional moment should always be included in the analysis of the crane girder to pile cap connection detail, and into the analysis of the girder's lateral reinforcement.

Tie-downs should be placed as close to the pile cap as practical. In that instance, all shear caused by torsional moment will be concentrated at one end of the crane beam. Additional shear force can be easily addressed by special longitudinal reinforcement placed on the vertical faces of the crane beam and spliced within the pile cap closure pour.

Another important issue that is frequently neglected during design of the tie-down device is prying action. The analysis shown in *Figure 6 (page 36)* explains how the force acting on the tie-down rod can be

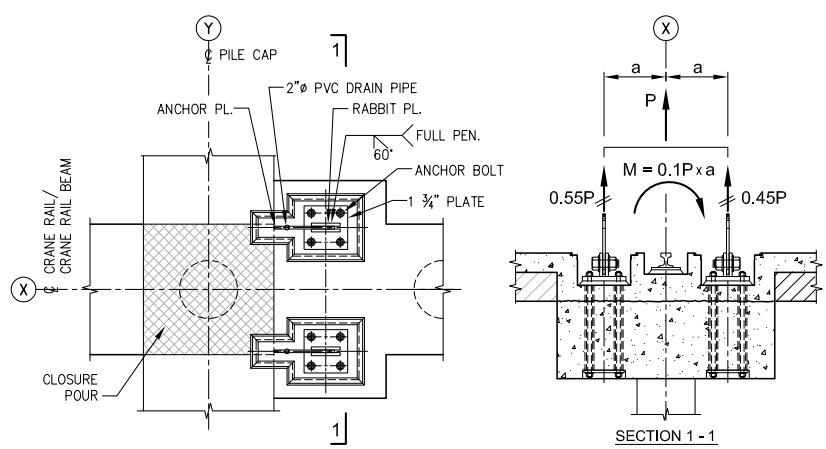

Figure 4: Symmetrical tie-down detail.

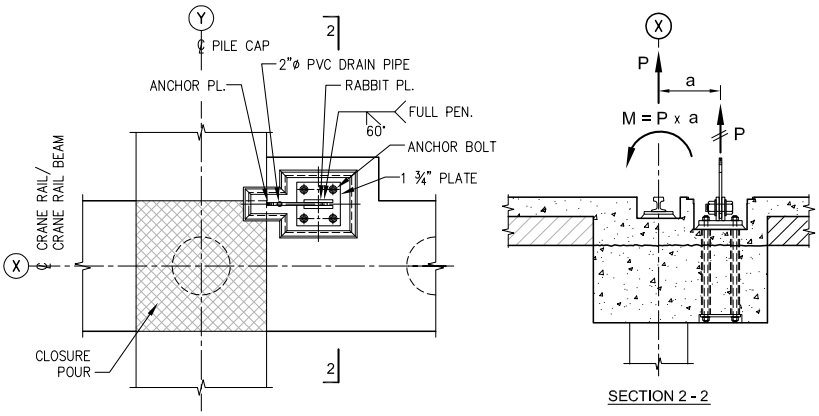

Figure 5: One sided tie-down detail.

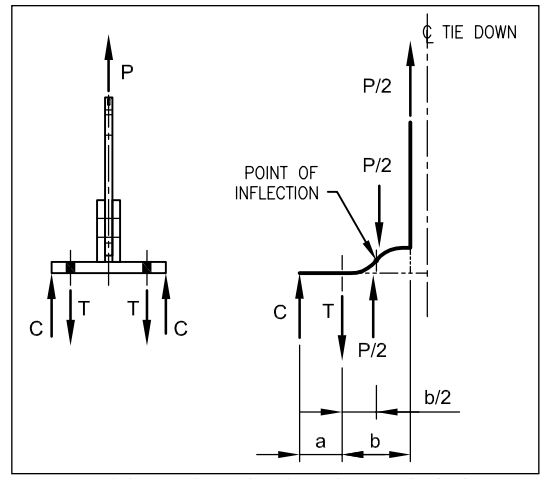

Figure 6: (left) Tie-down detail. (right) Free body diagram.

greatly underestimated. There have been multiple occasions when tie-down bolts were snapped and expensive cranes were destroyed.

Stow Pins

Stow pins should be designed for shear forces. The most commonly used stow pin detail is shown in *Figure 7*, and a suggested stow pin detail is shown in *Figure 8*.

The following example explains common omissions in the design of stowage elements.

Example

For the design of tie-down devices and stow pins, the engineer should know the maximum forces that will develop on these devices. Formulas provided by ASCE 7-05 can be used for preliminary analysis. However, the magnitude of these forces has been proven to be underestimated when investigated in wind tunnel tests. Therefore, actual forces should be based on wind tunnel test results.

The design of stowage devices has frequently been treated without due respect. The results of inadequate designs in these seemingly secondary devices have proven to be catastrophic. In the following example, we will use a more realistic design approach and actual forces provided by a crane manufacturer.

Tie-down force = 440 kip per corner
Wind force perpendicular to rail = 530 kip
Wind force parallel to crane rail = 485 kip

Tie-down Device (*Figure 6*)

It is highly advisable to use sleeves and through bolts for tie-down anchorage. Tie-down bolts work for tension only, and they can be easily replaced if subjected to excessive corrosion. If the pullout force P = 440 kips, with a = 3.0 inches and b = 4.188 inches, then the reaction force on each side of the tie-down center line will be: C = 0.5*440*2.094/3.0=153 kip. The force on the each bolt will be: T_{req} = (0.5*P+C)/2 = (0.5*440+153)/2 = 186 kip. Therefore, each tie-down should be anchored with four 1¾-inch-diameter anchor rods: T_{prov} = ϕ*0.75Fu*A_b = 0.75*0.75*2.66*150 = 224 kip. The original tie-down detail specified 1¼-inch-diamter threaded rods, a clear indication that prying action was not considered in the design.

This is a dangerous omission. It is impractical to design a tie-down device without considering prying action. The sole plate thickness for such a device would be unreasonably thick. The thickness of a sole plate should be checked for flexural stress and deflection. Based on the diagram shown in *Figure 6*, $\delta = (0.5P*(0.5b)^3/3EI)*2 = P*b^3/24EI < 0.063$ in. The designer should use net section moment of inertia for the deflection analysis.

Similarly, the net section of the sole plate should be checked against the flexural stress. The outlined procedure is reasonably conservative. Depending on plate thickness, the parameter "a" might shift towards the anchor bolt. Some engineers prefer to use "0.66a" rather than "a" when calculating heel reaction C. Such an assumption may be excessively conservative. The ratio (a/b) = 0.75 can be used for rational design of the tie-down device.

Stow Pin

The stow pin pocket should be designed for V = 530 kip. Consider two stow pin details: a commonly used detail (*Figure 7*) and a modified detail (*Figure 8*).

To understand the principles at work in any embedded vertical elements, we must view them as short piles in a very stiff medium. It is obvious that the elastic foundation reaction under the pipe sleeve is considerably higher than the sum of elastic foundation reactions under all studs. Therefore, before the load can even reach the stud, it will crush the concrete. The bearing stress at the top of the concrete is: f_p = 530/(2*8*4) = 8.28 ksi. The dynamic load will certainly crush the top 4 to 6 inches of concrete,

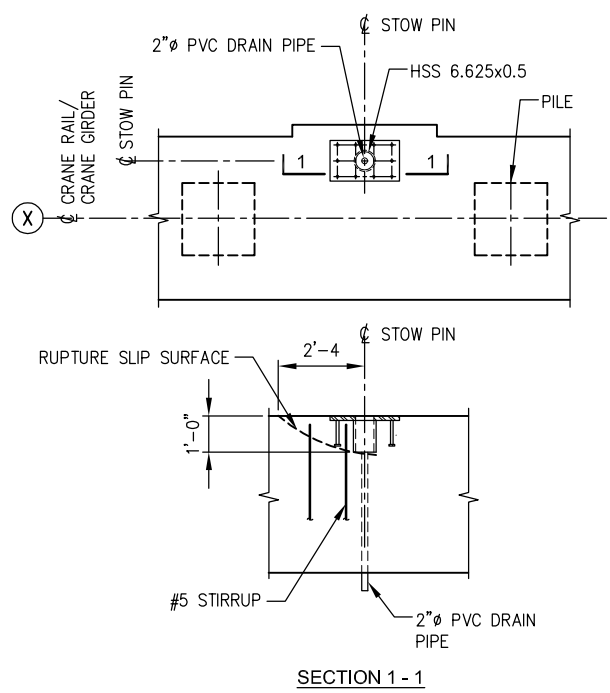

Figure 7: Commonly used stow pin detail (not recomended for heavy wind load).

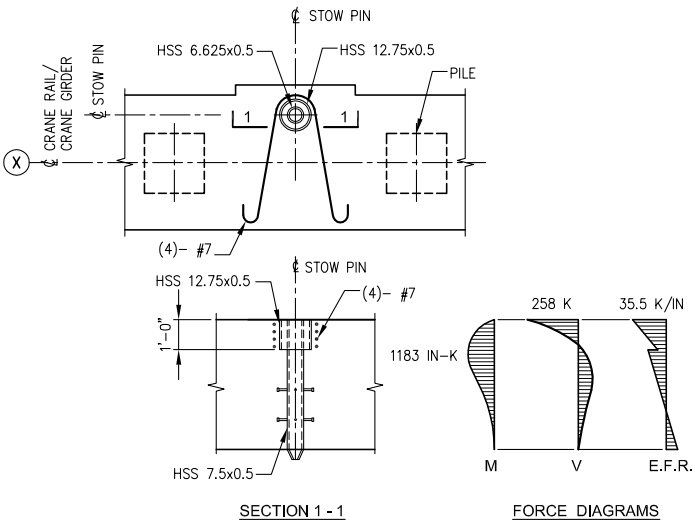

Figure 8: Alternate stow pin detail.

and the sleeve will try to rotate as an infinitely stiff short pile. The slip circle surface formed by such a failure will intersect one stirrup, possibly two if they are placed close enough to confine the ruptured surface.

Assume that slip surface intersects two legs of #5 stirrups in a direction parallel to the crane girder. The shear capacity provided by #5 bars can be estimated using the shear-friction formula. Assume a 20-degree shear plane surface. The angle between the slip surface and the rebar is $\alpha = 90 - 20 = 70$ degrees. $\phi Vn = 0.85*4*0.31*60(1.4*\sin 70+\cos 70) = 105$ kip $< 485/2 = 242$ kip.

However, the direction perpendicular to the crane rail is the most critical one. That direction has a higher force, 530/2 = 265 kip, and does not have efficient reinforcement to deal with short stiff pile rotation. The unintended consequence of this stow pin detail is additional shear and tension force on the tie-down.

Analysis of both stowage devices clearly indicates the possibility of a crane progressive collapse.

The alternate approach (*Figure 8*), treating the sleeve as a long pile in a stiff medium, shows a 6-inch-diameter x 40-inch-long pipe with concentric 12-inch-diamter x 12-inch-long sleeve at the top of the device.

Analysis of the stow pin device shows an Elastic Foundation Reaction at the top of the sleeve, EFR = 35.5 k/in. That EFR translates into a concrete bearing pressure = 35.5/12 = 2.96 ksi < $0.85*f'_c = .85*5 = 4.25$ ksi

Comparison of the two stow pin details clearly indicates the deficiency of the commonly used solution. It should be noted that failure of only one out of six stow elements (stow pins or tie-downs) can lead to progressive collapse of the whole system, and the loss of a multi-million dollar piece of equipment.

Load Combinations

Suggested Load Combinations and impact allowance were discussed in a previous series of articles, *Rational Approach to Design and Analysis of Piers and Marginal Wharves*, in STRUCTURE® magazine (May, November, and December 2011). These articles are available in the online archives at **www.STRUCTUREmag.org**.

Conclusion

Each aspect of a crane runway should be treated with the same respect and diligence as major crane runway components. Disaster frequently results from the failure of secondary elements.▪