lessons learned

Structural Upgrade of Sutro Tower

San Francisco, California

By: Ronald O. Hamburger, S.E.

Sutro Tower, in San Francisco, California is a 770-foot high, freestanding steel broadcast tower supporting three main, 215-foot high antenna structures and numerous ancillary broadcast equipment. It is owned and operated by a consortium of the three major broadcast networks, and provides television, radio, and emergency services communication transmission throughout the San Francisco Bay area. The tower was designed and constructed in the mid-1970s. In 1998, digital television transmission equipment was added. This equipment consisted of a large mast antenna, suspended at the center of the tower, near its top. Addition of the antenna equipment resulted in significant wind load increase, but only relatively minor additional seismic loading. A structural strengthening project was undertaken to reinforce the tower for the additional wind loading. The tower met applicable code requirements for seismic loading. However, under pressure from neighborhood groups, a series of detailed nonlinear dynamic analyses of the tower were conducted to determine the tower's response to ground motion having a 1,000 year mean recurrence interval. Although these analyses indicated the tower would remain stable, they also indicated excessive inelastic demands and potentially severe damage to a number of the members and connections. As a result, the tower ownership elected to perform a voluntary seismic upgrade of the tower.

The tower comprises three principal columns (or legs) located at the vertices of an equilateral triangle. Each leg itself comprises three wide flange column elements, laced by diagonal double-angle braces to form a triangular section, approximately 6-feet wide on each side. Leg spacing varies linearly from 150-feet at the base of the tower to 60-feet at the narrowest portion (the "waist") to 100-feet at the antenna base level. The three tower legs are each supported vertically by 14-foot square concrete piers extending 14-feet down to the top of large mat foundations that measure 53 by 53-feet by 10-feet thick, and bear on the native bedrock underlying the site.

The three tower legs are connected by horizontal truss girders at 5 levels. Each of the lower 4 horizontal trusses is triangular in cross section, consisting of three hot-rolled section chord members latticed together with double angle braces The triangular cross section measures approximately 15-feet high by 6-feet wide. At the top level, the horizontal truss girder includes outriggers that cantilever beyond the legs. The top truss girders consist of four chord member sections tied together with double angle braces.

The double angle brace members and miscellaneous structural steel components, such as gusset and splice plates, are made of A36 steel, while various grades of higher strength A572 steel is used for all the wide flange members in the legs and truss girders. A490 high strength bolts are used in all bolted connections. Non-structural cladding encloses all leg and truss assemblies except at the uppermost two levels.

Lateral (wind and earthquake) forces are primarily resisted by high strength cables, arranged in an "X" pattern across each of the individual bays bounded the tower legs and horizontal truss girders. Each cable is pre-tensioned by 25% of its breaking strength. In addition to the main cables, a series of Phillystran cables provide guy support for the three vertical antenna posts located atop the main steel structure. Under the building code, the structure is classified as a building-like non-building structure with an ordinary steel braced frame lateral system.

Sutro Tower is located atop a prominent hill in central San Francisco. The hill is underlain by near surface bedrock of the Franciscan sandstone formation. This site is categorized as Site Class B under the Uniform Building Code. It is located approximately 8 kilometers to the northeast of the San Andreas fault, source of the great San Francisco earthquake of 1906.

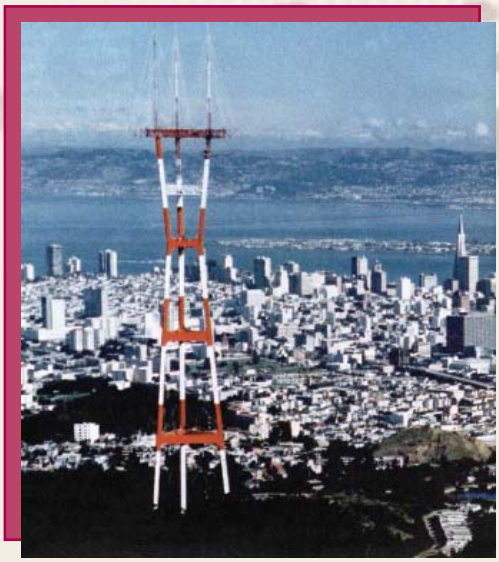

Figure 1: Sutro Tower dominates the San Francisco skyline and provides radio, television and emergency communication broadcast transmission throughout the San Francisco Bay Area

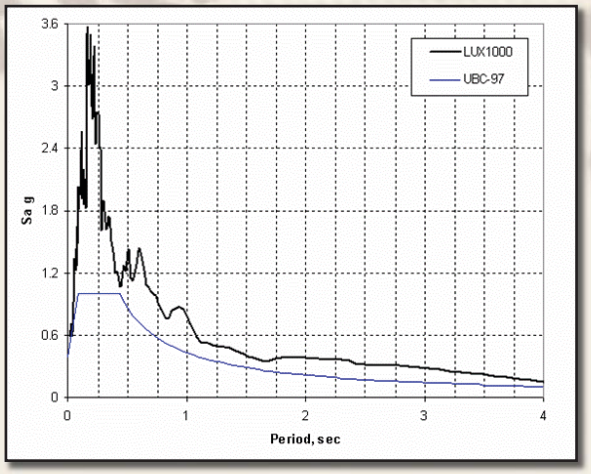

Figure 2: Comparison of ground motion used in analysis and code-specified spectrum

Nonlinear time history analyses of the tower were performed to investigate the ability of the structure to withstand a major earthquake along the San Andreas Fault. This ground shaking was represented by a suite of 3 acceleration time histories developed for a 1000-year return period. Ground motions were developed to include consideration of near source effects, topographic effects and fault rupture direction. *Figure 2* compares the acceleration response spectra for one of the ground motions used in the analysis with that specified for this site in the 1997 Uniform Building Code. As can be seen, the design ground

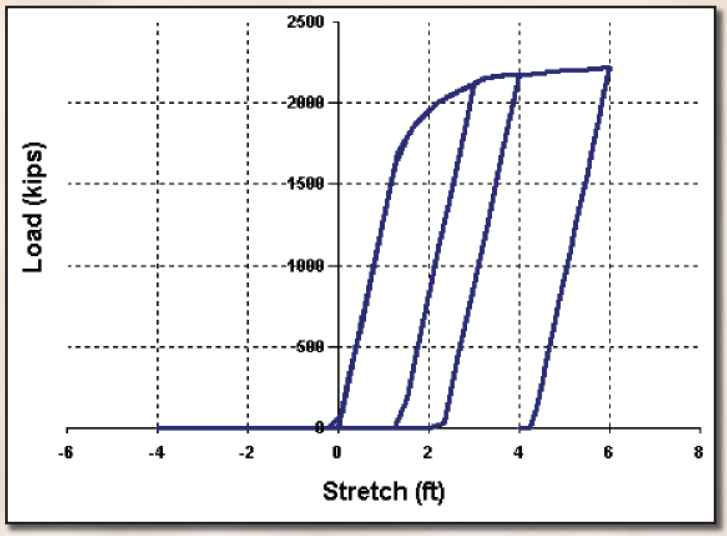

Figure 3: Force deformation behavior of cable elements used in model

motions selected for this project were substantially in excess of that specified by the building code.

ANSYS general-purpose finite element software was used to perform the nonlinear dynamic analyses. ANSYS offers versatile capabilities for nonlinear and dynamic analysis. The model had a total of approximately 5,400 elements representing the structural members and 7,400 connections. Columns were modeled using standard inelastic fiber elements to capture nonlinear axial flexural interaction. Special purpose elements were developed to model the unique behavior of cables, characterized by elastic-plastic behavior in tension and slack behavior in compression. *Figure 3* illustrates the hysteretic behavior obtained for these cable elements. Special elements were also developed to model the inelastic compressive behavior of the slender double angle lacing members in the legs and horizontal trusses, based on hysteretic behavior obtained from a laboratory testing program conducted at the University of California at Berkeley. *Figure 4* illustrates the hysteretic behavior of these elements.

The analysis indicated that the tower remains stable for the three ground motions and that the force and deformation demands on nearly all of the members and connections were acceptable. However, excessive demands were predicted for some of the members and connections. In general the following deficiencies were noted:

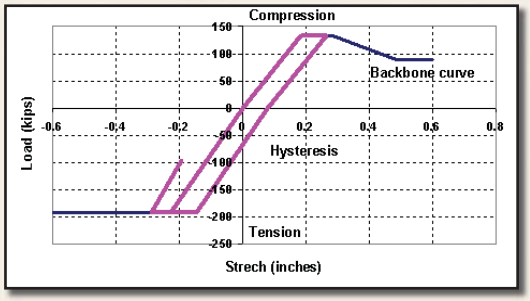

Figure 4: Force deformation behavior for lacing members used in model

• Column members at the mid-height of tower legs had inadequate compressive capacity and could be subject to buckling.

• Connections of lacing braces were inadequate to develop the yield strength of braces in locations where yielding was predicted to occur.

• Some double angle bracing members had excessive compressive demands requiring compressive ductilities on the order of 4 or higher.

Columns were strengthened, with the addition of cover plates, to provide them with adequate compressive strength to avoid buckling. Deficiencies in bracing connections were generally found to be a result of inadequate net sections in the bracing at the bolted end connections. These connections were strengthened by replacement or reinforcement of the gusset plates and welding of the braces to the new or strengthened gussets.

The deficient lacing members were more difficult to reinforce. These members generally had adequate tensile capacity but inadequate compressive capacity. Conventional strengthening of the lacing by replacing them with stronger section members, or reinforcing the section itself would have increased both the tensile and compressive load carrying capacity of these members. This, in turn, would have resulted in greater loads on other members in the tower, as it responded to ground shaking in an inelastic manner. Consequently, it was desired to find a way to increase the nonlinear compressive deformation capacity of the lacing members without increasing their tensile stiffness or strength. In some cases, this could be achieved by converting bays braced with single diagonals to double angle bracing, and in so doing, decreasing the slenderness of the braces without increasing their tensile capacity. However, due to the geometry of the tower and the presence of extensive

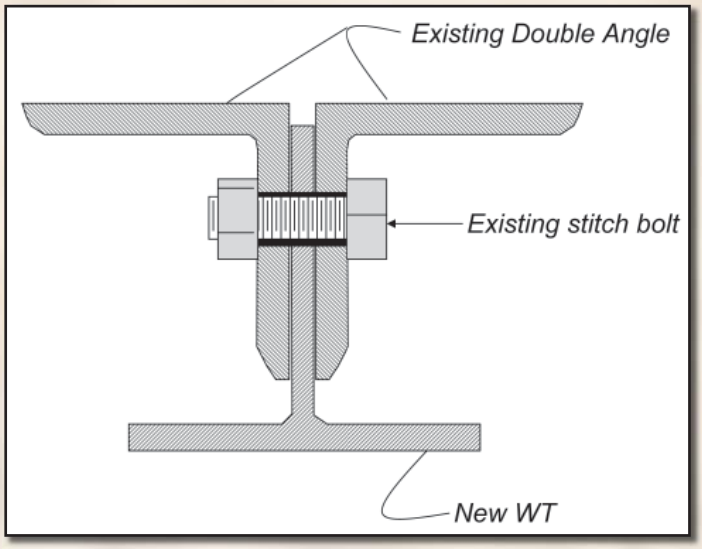

Figure 5: Cross section of retrofitted double angles.

Figure 6: Local buckling at mid-span of double angle brace in compression

cabling, wave guides and other equipment related to the broadcast transmission use of the tower, it was not possible in all cases. For these cases, the double angle braces were upgraded with the insertion of new WT members between the back-to-back legs. New WT reinforcement was connected to the double angles, using the bolts originally provided in the double angles for intermediate attachment, but using slotted holes in the new WT members, so that the stiffness of the reinforced section matched that of the original member. As illustrated in *Figure 5*, this resulted in a cross section that had the approximate appearance and slenderness properties of a wide-flange section, but the axial stiffness and tensile strength of the original double angles.

Given the unique nature of the proposed upgrade system for the double angle members, the design team decided to conduct a program of laboratory testing to confirm the design's viability and to confirm design criteria used to proportion the strengthening. A total of 8 specimens, comprising 4 double angle brace members in the as-installed condition and 4 strengthened double angle brace members, were tested at the University of California at Berkeley.

Unstrengthened specimens exhibited poor inelastic behavior with local buckling initiat-ing at points of plastic hinging at mid-span *(Figure 6)*, followed by fracturing. Fracture also occurred at plastic hinge locations at the ends of the braces *(Figure 7)*. Strengthened braces, however, performed much better, avoiding local buckling *(Figure 8)* and displaying remarkably stable hysteretic behavior, both in tension and compression, validating the design approach.

Installation of tower reinforcement occurred during a 6-month period in the fall and winter of 2003-2004 without interruption of broadcast communication. The author wishes to acknowledge the efforts of Dr. Paul Sommerville of URS Consultants who developed the ground motion for the analysis, Dr. Jorma Arros and Dr. Juan Chavez of ABS Consulting who performed the analysis, Mr. Vincent Borov of MMI Consluting Engineers who participated in the structural detailing and Mr. Jean LeCordier of Tower Engineering who assisted in detailing of retrofit elements and provided supervision of construction.▪

Figure 7: Fracturing of angle at point of plastic hinge development at brace end connection

Figure 8: Buckling befhavior of reinforced brace specimen

Ronald Hamburger is managing principal of Simpson Gumpertz & Heger's western regional structural engineering operations. He is also serving as the 2004-2005 President of NCSEA.