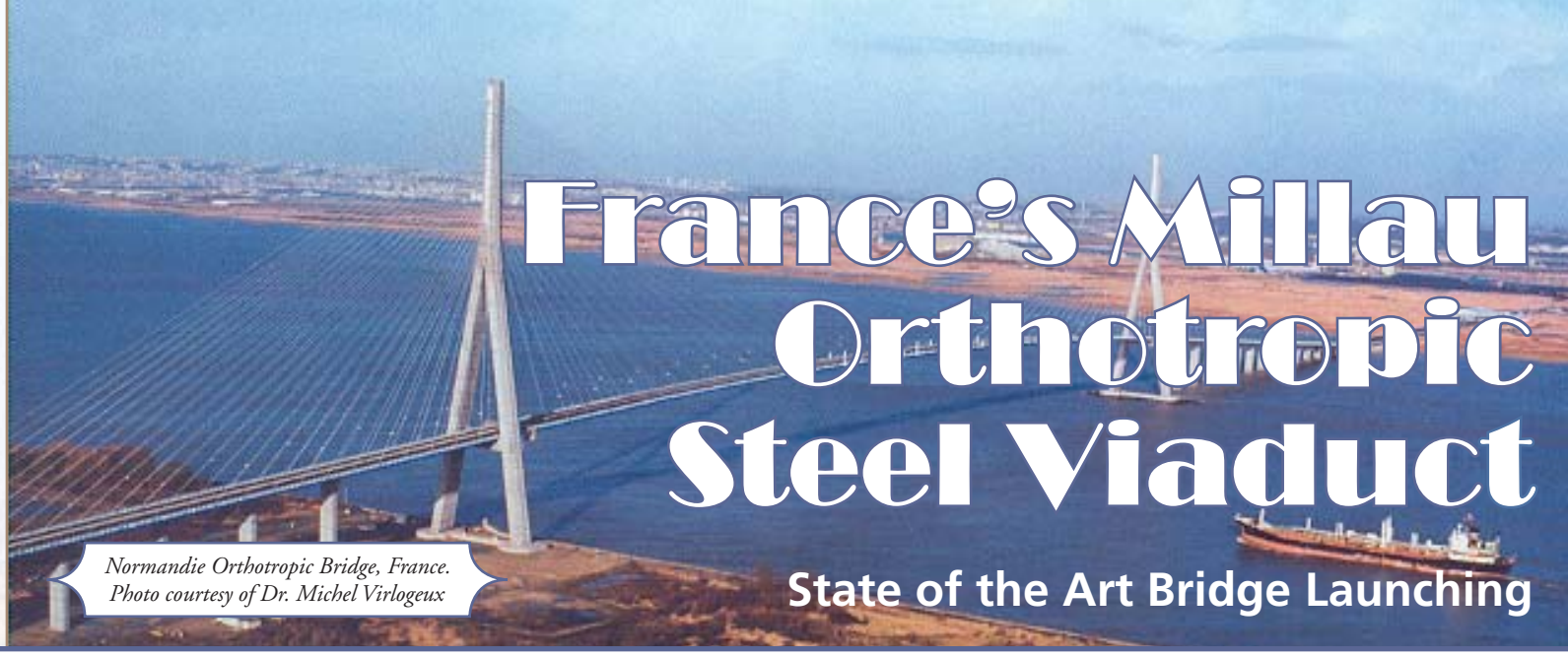

France's Millau Orthotropic Steel Viaduct

State of the Art Bridge Launching

Normandie Orthotropic Bridge, France. Photo courtesy of Dr. Michel Virlogeux

By Alfred R. Mangus, P.E.

I have been asked to briefly summarize one of world's most spectacular new bridges, which has broken many records.

France's Millau Viaduct has the world's largest orthotropic deck area, plus largest and most complex steel superstructure launching to date. The French freeway A-75 was built as a toll route due south of Paris to the Mediterranean Sea, through the difficult but scenic terrain of the Massif Central region France. The goal of the A-75 freeway was to bypass a small, scenic town in this beautiful region of France.

The Architect for the Millau Viaduct was Sir Norman Foster, a British Lord. The lead engineer, Dr. Michel Virgeloux, had managed the design team for the world's longest clear span cable-stayed Normandie Bridge, which held the record from 1995 to 1999. It was successfully built across the mouth of the Seine River. The middle 50% of its 2,808-foot clear span superstructure is an aerodynamic orthotropic box girder wing (*Figure 1*). These sections of deck were lifted directly from river vessels to the final superstructure location. The architect and engineer had seen many concepts for viaducts. Their vision for the Millau Viaduct competed against four practicable solutions.

Viaduct Concept

The viaduct is the most spectacular of the bridges to cross this region of France. The bridge is a classic design, blending bridge aesthetics, bridge maintenance, bridge engineering and bridge construction into a practicable compromise. To cross a high speed grade from the top of the north plateau to the southern plateau would require building the world's highest slip formed concrete bridge piers. Other viaducts in Europe have used orthotropic steel box girders with slip formed concrete columns. Due to the longer clear span lengths of 1,122-feet, a cable-stayed system was necessary. The bridge was also placed on a horizontal curve so that drivers could see the series of pylons while driving safely. Straight bridges are not as visually interesting to the driver.

Figure 1: Author standing below the Normandie Bridge. Photo by Dr. W. Hoorpah of MIO France

The controlling wind loading is from vertical updrafts on the superstructure. Paragliding is a popular sport in this region. Earthquake loading was not a controlling load. The split or divided concrete columns more readily allow thermal movements. "Divided" or "split" columns have been used in Europe for quite a few bridges. Because of the many similar factors, it was very logical for the designers to utilize many details for the Normandie Bridge on the Millau Viaduct.

The Decision to Launch

It seems counter-intuitive that a material such as steel, which has a mass more than three times as much as reinforced concrete, will result in a superstructure with ⅓ the dead load mass. As bridges increase in size, their self-weight begins to control design rather than the live load of the vehicles. Thus orthotropic steel superstructures dominate long span bridges around the world. There are less than 75 bridges in North America that have been "launched" as a construction method for a permanent bridge system. However, launching is a common solution in Europe, where several thousand bridges have been launched both with steel and concrete superstructures.

The construction-fabrication team felt that it was possible to launch the superstructure more than a mile. Launching means that the superstructure is assembled on the sides of the valley and pushed horizontally to closure. The scope and size of pushing such massive units to meet had not been done before. The meeting point would be over the maximum valley depth or over the Tarn River.

One technique of launching is to use a "falsework pylon" with temporary cable stays to provide intermediate support to the leading portion of superstructure. Another money saving technique selected was to use two of the final pylons as the "falsework pylons." Another technique of launching is to use temporary falsework towers at midspan of permanent columns. It required very large falsework towers to be built, painted bright red and fabricated of steel pipes welded together. The tallest are near the Tarn River. Superstructure closure at the deepest point greatly reduced falsework height.

continued on next page

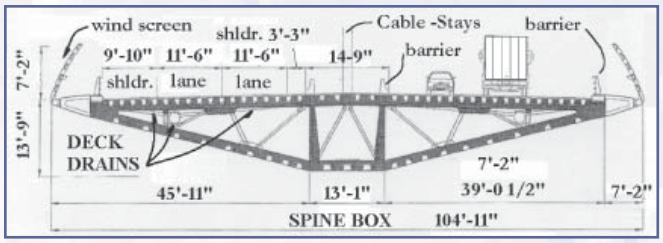

Figure 2: Millau Orthotropic Bridge - as built by contractor

Once the decision had been made to switch erection techniques, the team selected a common method to frame the aerodynamic box girder, an open truss configuration. To handle the concentrated compression loads, a central rectangular spine or box girder was created. Caisson is French for box and used for a variety of applications in American construction jargon. The Normandie Bridge has a trapezoidal spine box, which was also detailed for the Millau bid documents. The fabricator divided the symmetrical bridge superstructure into 16 units or components. *Figure 4* is an exploded view of how the 16 components were created.

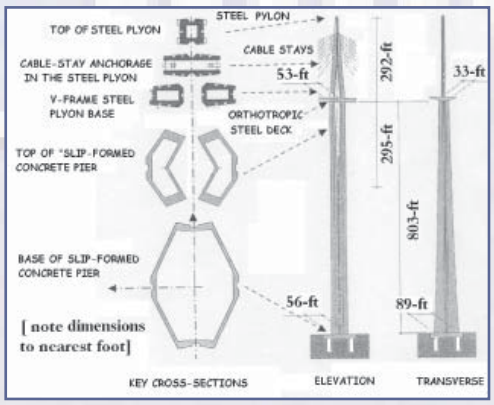

Figure 3: Millau Towers - built by contractor

Orthotropic Rib Details

The contractor chose Profilafroid, a metal fabricator specializing in rolling metal shapes. Their main customers are automobile manufacturers and train car manufactures. They also roll metal guardrails and sheet piling. The company rolls shapes with specialized rolling equipment. Profilafroid has rolled ribs for quite a few orthotropic bridges in Europe. Dr. Hoorpah was kind enough to take me to their facilities in the farming region on the outskirts of Paris. Mr. Aldelia met with us to give us a plant tour and see a display of their products.

For short rib lengths, the ribs are made on a brake press, which most fabricators have in their shops. Rolling equipment requires a series of rolling stages; thus special dies are needed for the various stages and more investment in equipment facilities. Pressed ribs require more field-splicing due their shorter lengths. The Profilafroid supplied three rib shapes, which had a combined weight of 6600 metric tons. Profilafroid supplied me with shop drawings with the fabrication tolerances, including such items as a 300-mm depth rib with a plus or minus tolerance of 2-mm.

Orthotropic Assembly Summary

A 66-foot long spine box, or caisson, was built in a fabricator shop and hauled with special trailer trucks down freeway A-75 to "field assembly areas". Assemblies 1, 8, 9, & 10, and braces 11 & 16 were welded or bolted together to form a box girder segment. Deck sections 2, 3, 4, 6 & 7 were shipped as truck-able sized components down the roadways. The double or back to back channels (12, 13, 14, and 15) were shipped loose and field bolted to the gusset plates in the field assembly area located on the north and south plateau's adjacent to the Tarn River Valley. The largest components, the spine box girders, were laid out first to be straight and true. Then all the additional units were added in an assembly line process. A movable welding shed enclosure ensured that the welders were comfortable regardless of the weather.

[**www.orthotropic-bridge.org for proceedings**]

World's Largest Steel Bridge Launching

At the ASCE Orthotropic Bridge Conference, engineers with Enterpac (Wisconsin) explained the complex system of launching, via animated video. (The details are beyond the scope of this article.) The simplified summary is that a series of jacks lift and then push the structure forward in repetitive cyclic process around the clock.

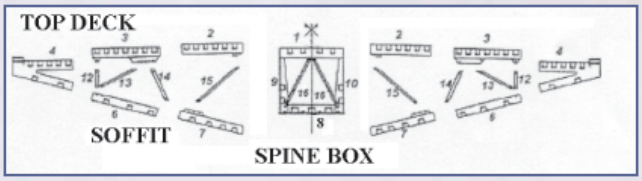

Figure 4: Millau Viaduct - as fabricated in 16 components

Jacks are located at the tops of all the falsework towers and concrete columns. A computer system was used to guarantee simultaneous synchronization of all the jacks. The techniques were field tested on steel box girder bridges with reinforced concrete decks that were built as part of the A-75 Freeway.

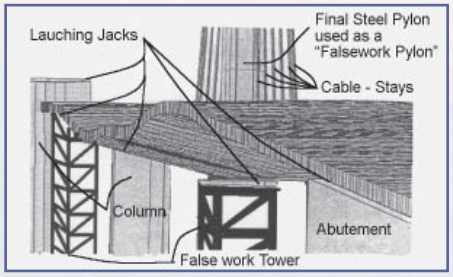

Figure 5: Finite element analysis of predicted sequence launching steel deformations allowed

The use of a pylon to support a superstructure for both steel and concrete bridges has been used in Europe for more than several decades. So each moving end had a launching nose and final pylon. After meeting over the Tarn River, the remaining five pylons were moved onto the superstructure. Pylons were rotated into vertical position with specialized falsework with turning mechanisms. Enterpac's hydraulic jacks were also used to make vertical adjustments in raising and lowering the red painted steel falsework tower. Cable-stays were installed to bring the superstructure into final correct alignment. Finally, a wearing surface system was applied.

The launching required submission of additional calculations demonstrating that the final structure was not harmed or "overstressed" during the process. The computer finite element deformed shape is shown in *Figure 5*.

Conclusion

The Viaduct broke many records due the logic used to create a solution representing a practicable compromise, plus allowing the contractor to erect it in a logical manner. Engineers, including myself, continue to study what was accomplished.▪

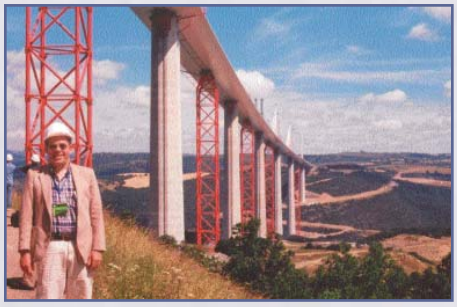

Figure 6: Author at site June 2004

See page 16 for information about the author...

San Diego Orthotropic Bridge. Photo by Pete Asanio, Caltrans.

California's Orthotropic Steel Bridges

1965-2005... 40 years of Evolution

By Alfred R. Mangus, P.E.

Most bridges (about 99%) have concrete decks; the remaining 1% have steel or timber decks. A very few have solid steel plate decks; a larger number use various steel grating. An Orthotropic Steel Bridge (a 100% steel superstructure) is when the steel deck plate is welded to support steel members such as beams or girder; a much tougher system results. Caltrans adopted this system in the 1960's because a lower mass bridge receives lower forces or stress from an earthquake. Japan has over 250 Orthotropic bridges because of its high seismic regions. Orthotropic steel decks in North America are very rare, with about 51 out of 650,000 inventoried bridges. California has 25,000 bridges or 4% of all USA bridges, but more than 25% of the Orthotropic bridges. Active California bridges with Orthotropic or 100% steel superstructures are summarized in the table below.

Bridge in Service Name (year open to traffic)	Rib Type	Deck Area (Sq. Feet)	Bridge Number (by owner)
Dublin 580/680 Test [1965]	Closed	10,880	33-0371G
Ulatis Creek Test [1966]	Open	4,420	23-0052R
San Mateo-Hayward [1967]	Open	468,875	35-0054
San Diego - Coronado [1969]	Closed	122,220	57-0857
Queensway Twin [1971]	Closed	110,440	53C-0551 L/R
Four --- BART Rail [1972]	Closed	4,840	A-096 A & B
Colusa [1972]	Closed	4,006	15C-0001
Miller - Sweeney [1973]	Closed	7,777	33C-0147
Braille Trail Pedestrian [1977]	Open	360	N/A
Golden Gate redecking [1997]	Closed	387,000	33-0623S
Maritime Off-Ramp [1997]	Closed	85,287	33-0623S
Alfred Zampa @ Carquinez [2003]	Closed	339,133	28-0352L
Completed California Bridges in Service		1,545,198	
Akashi-Kaiyo, Japan [1998]	Closed	84,086 sq. m.	
Millau Viaduct, France	Closed	1,989,168 sq. ft. = 184,800 sq. m.	

Background

The evolution of a 100% steel superstructure, or orthotropic superstructure, took decades. In the 1920's, American engineers began using steel plates riveted to steel beams for large movable bridges. The purpose was to minimize the dead mass load of lift spans. In 1938, the American Institute of Steel Construction (AISC) began publishing research reports on steel decks, labeled a "battledeck floor" since it had the strength of a battleship. The Germans began to use the 100% steel-deck bridges as grade-separation bridges for their "autobahn" in 1934, and patented this system in the 1950's. In 1963, the AISC funded and published the first design aid available in English, *Design Manual for Orthotropic Steel Plate Deck Bridges*, authored by Roman Wolchuk. AISI, the American Iron and Steel Institute, sponsored funding of the documentation of the various wearing-surface test bridges built across North America. Caltrans purchased German design manuals, which documented the design procedures that were used in Europe. This prompted the states of California, Illinois, Michigan, Missouri and Oregon to create prototype bridge systems.

Wearing Surface Test Bridge at Dublin (1965)

This connector bridge was built as an experimental bridge to check the accuracy of Caltrans' design software, *Orthotropic Plate Design*, and because engineers were not sure whether to use a thin or thick wearing surface on the 100% steel superstructure. The main reason for using orthotropic bridges is that they have the lowest mass; thus, a wearing surface should be as thin as practicable. This test bridge has two totally different closed rib and deck systems, including two different wearing surfaces. The four-span bridge uses "closed" or trapezoidal ribs as shown in *Figure 1*. A "closed" rib forms a miniature box beam. The rigid steel bent is comprised of three welded steel box members aesthetically shaped. This short span orthotropic deck bridge is still in use after 40 years of service, but the wearing surface has been replaced on the thin section. The deck and ribs were built of ASTM A-441 Steel, while girder webs and bottom flanges are ASTM A-36 steel.

Figure 1: Wearing surface test bridge. Photo by Joe "Ostap" Bender

Wearing Surface Test Bridge at Ulatis Creek (1966)

Engineers designed the Ulatis Creek experimental bridge to test five types of wearing surfaces materials for the proposed new Hayward San Mateo Bridge. Only the two outside lanes of a 5-span bridge for eastbound Interstate I-80 are Orthotropic. All spans are 25 feet long, and the Orthotropic deck has "Split-T" ribs that support eastbound traffic on the outside (truck traffic) lanes. Ulatis Creek was repainted and a single replaced wearing surface was installed after testing (*Figure 2*). The Ulatis Creek experimental bridge lanes are still in service. Caltrans considers its largest bridge a success, thanks to this small test bridge.

Figure 2: Wearing surface test bridge at Ulatis Creek. Photo by Joe "Ostap" Bender.

San Mateo - Hayward Bridge (1967)

This additional San Francisco Bay Crossing carries six lanes of California Route 92 traffic. It has two side spans of 375 feet each, counterbalancing the main 750-foot span. There are 14 approach spans of 292 feet, or 7 per side of the main span. This bridge has the largest total orthotropic deck area of all California bridges. The lowest mass was the reason for orthotropic selection, which reduces over all costs for seismic loading in the soft soils of bay mud.

The two main deck members are rectangular box girders. Maximum depth is at supports. Fatigue "cut-outs" were not used at the base of the open rib in all of the crossbeams' webs. The structure was moved and erected in very large pieces by a 500-ton floating crane vessel named the "Marine Boss". The orthotropic deck varies in thickness with deck stresses. Epoxy concrete was used as the wearing surface, and is still in use after over 38 years, although some potholes have

begun to form. This important bridge won the Outstanding Civil Engineering Achievement award of 1968 by ASCE. (*Figure 3*)

Figure 3: San Mateo-Hayward Bridge Across San Francisco Bay. By Valerie Moore.

[http://www.dot.ca.gov/hq/esc/tollbridge/SMHay/SMfacts.html]

San Diego – Coronado Bridge (1969)

This major landmark toll bridge with 5-lanes of traffic sweeps around the harbor area of San Diego, and connects Coronado Island with the mainland. Caltrans engineers selected a single-cell box-girder orthotropic steel deck design (continuous length of orthotropic portion is 1880 feet). A constant depth box was used for the main spans over the shipping channel. Steel plate girders with a concrete deck were used on the remaining length. The main spans used trapezoidal ribs with spacing patterns from design aid booklets prepared by the Bethlehem Steel Company. Addition research was completed by UC Berkeley.

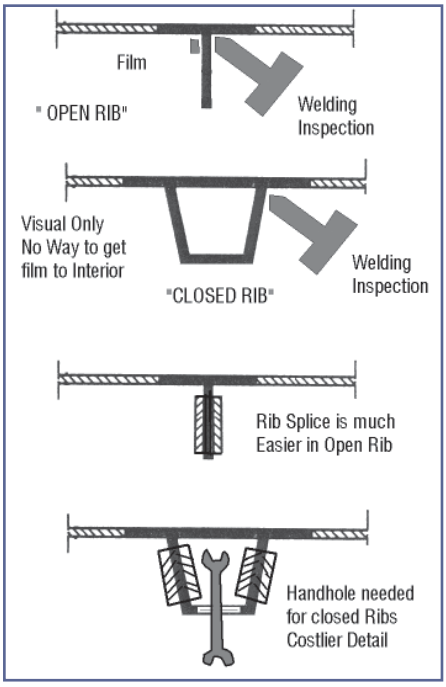

Figure 4a: Key differences between closed ribs vs. open ribs.

Engineers decided to not use open ribs, but rather to switch to closed ribs. The difference between open and closed ribs is not as simple as low mass. Although trapezoidal ribs give

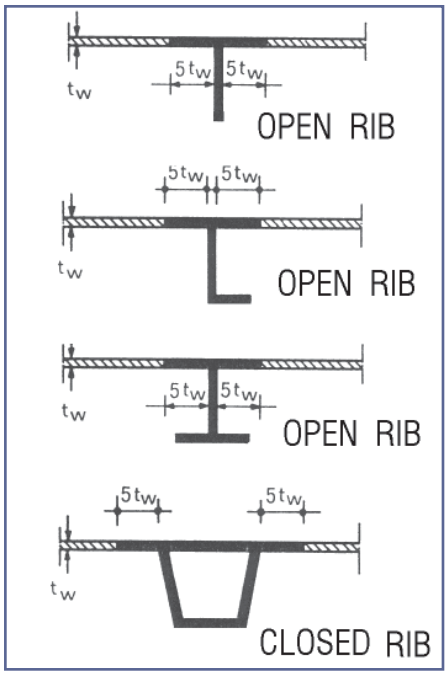

Figure 4b: Rib efficiency to carry stress

the lowest mass, rib to deck welds cannot be x-rayed and rib splices are more complicated and expensive. The bridge was erected in large pieces with the barge crane, "Marine Boss". The sections were field-bolted together.

Queensway Twin Bridges (1971)

The Queensway identical 3-span twin bridges are near the decommissioned Queen Mary ocean liner, a popular tourist attraction. Each Orthotropic bridge has a main span of 500 feet. A drop-in span of 290 feet suspended with steel hanger bars from two cantilever side spans of 105 feet creates a total of 500 feet. The side spans are 350 feet. A concrete bridge was estimated at 250 psf, steel plate girder with concrete deck at 120 psf, while this design was less than 90 psf. Each superstructure cross-section is a single-cell box with an overhanging deck. The superstructure was fabricated in 14 pieces and erected in eleven days. Each drop-in span was fabricated as a 618-ton piece, in Richmond, California, and floated 700 miles south to Long Beach. The deck plates are a minimum of 0.5 inches thick.

Figure 5: The Queensway Twin Bridges in Long Beach Harbor. Photo by Gris Meza, courtesy of Caltrans.

BART (Bay Area Rapid Transit) Bridges in Berkeley (1972)

Four weathering, single-track, simple span steel bridges were completed for BART in 1972. Each bridge supports a single track and has a simple span of 110 feet. Two parallel bridges cross over Golden Gate Avenue, and two parallel bridges cross over Chabot Road. The abutments of the Golden Gate Avenue and Chabot Road bridges are separated by about 110 feet. Each deck is divided into ten identical deck panels, about 11 feet long by the width of the superstructure. These essentially square deck panels have six trapezoidal ribs that span the 11-foot deck panels. The 40 identical panels were shop-welded and field-bolted to the transverse floor beams. Gravel ballast for rail track on the weathering steel deck is used to make track adjustments for grade.

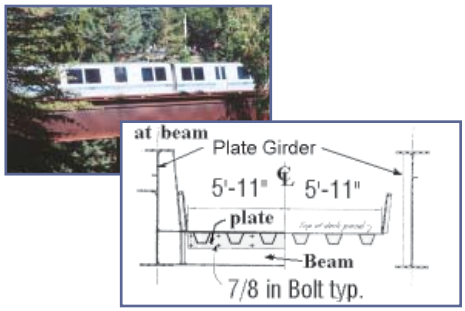

Figures 6a & 6b: The four BART bridges in Berkeley

The Colusa Bridge across the Sacramento River (1972)

This bridge is 80% prestressed concrete with a 105-foot removable steel orthotropic box section span. A trapezoidal welded steel box girder with an orthotropic deck was used to provide a lightweight removable section in a low-level concrete bridge. This unique solution cost half as much as a swing bridge, and required truck cranes or barge cranes to pick up the orthotropic steel span sections during construction. Two cranes operating from the bridge, or a single barge-mounted crane, were needed to lift this removable span. High-strength, corrosion-resistant, weathering steel (ASTM A-588) was specified throughout.

Figure 7: The Colusa Bridge section being towed. Photo by Joe "Ostap" Bender.

The Miller – Sweeney Bascule Bridge, Alameda Island (1973)

The Miller-Sweeney Bridge at Fruitvale Avenue is a four-lane single-leaf bascule bridge. Its movable span crosses the Oakland Estuary. This is a navigable waterway between Alameda Island and Oakland, CA, with access to San Francisco Bay. In 1989, the Loma Prieta Earthquake caused damage to the bridge inside the machinery pit and it was closed to all vessel traffic until repaired. In 1991, another mishap occurred when a fully-loaded sand barge (weighing 4,000 tons) hit the movable span and caused extensive damage. The wearing surface failed by creep when the movable span was in the open position and was resurfaced.

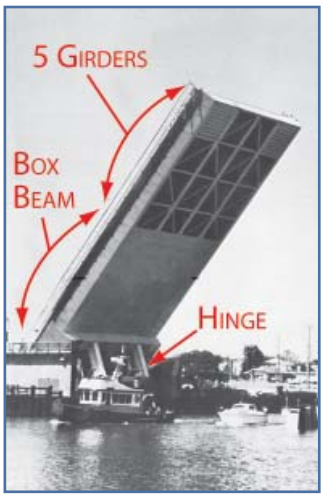

Figure 8: The Miller Sweeney Bascule Bridge. Courtesy of AISC-NSBA.

http://www.acgov.org/pwa/dept_maintenance_operation_miller_sweeney_bridge.shtml/

The Braille Trail Pedestrian Bridge (1977)

The Orthotropic bridge across Santa Rosa Creek is an integral part of the Braille Trail, built to help the visually impaired and those in wheel chairs to enjoy Spring Lake Park in Santa Rosa, California. This bridge is capable of being periodically submerged by floodwater. A timber bridge would float, and poor soil support discouraged a heavy concrete span; therefore, an orthotropic steel-plate bridge was the economical choice. A sand-wearing surface, bonded to the bridge's deck, provides a non-skid surface for wheelchairs and pedestrians. The superstructure was completely shop prefabricated about 150-miles from the park. The span was trucked to the site and lifted into place by a crane in 1976.

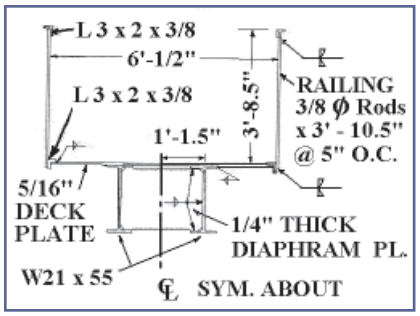

Figure 9: The Braille Trail Pedestrian Bridge cross-section

The Golden Gate Bridge Orthotropic Steel Deck Replacement (1985)

The Golden Gate Bridge's existing reinforced concrete deck was built in 1937. This redecking saved considerable weight, reducing seismic loading on the superstructure and tower foundations. In fact, the midspan rose about 7-feet after this retrofit was completed. Rebar corrosion inside the concrete deck from salt fog was another reason for the deck replacement. The bridge's main span is 4,200 feet with two back spans of 1,125 feet. Since the roadway deck was a secondary structural component, the concrete deck was removed in small pieces at night and replaced immediately with an orthotropic steel deck panel.

Figure 10: Golden Gate Bridge orthotropic steel deck replacement — night erection. Courtesy of James F. Lincoln Arc Welding Foundation.

http://www.goldengate.org

The Maritime Off-Ramp Bridge (1997)

The Maritime Off-Ramp is a curved "horseshoe" shape bridge crossing over I-80 in Oakland, California. This superstructure has a very sharp radius of 250 feet and a very shallow web depth of only 7 feet for 190-foot spans. The box girder superstructure is divided into 3 separate cells to resist torsional forces. Because this is a continuous structure, trapezoidal ribs were welded to the top and bottom box-girder flanges. The bridge sec-

tions were erected over busy I-80 on two different Saturday nights, creating an instant superstructure. The bridge was fabricated in 13 segments, weighing as much as 440 tons each, and erected with two special hydraulic jacks supported by special multi-wheeled trailers.

Figure 11: The Maritime Off-Ramp Bridge – Night Erection & Completed Bridge. Photo by Robert Colin, Caltrans.

The Alfred Zampa Memorial Bridge Across Carquinez Straits (2003)

The original steel truss bridge, completed in 1927 and designed by David B. Steinman, needed a seismic retrofit. Parsons Corporation selected a replacement solution of a suspension bridge with an aerodynamic orthotropic superstructure. The 1927 truss bridge will be demolished. Dr. John W. Fisher of Lehigh, PA, has developed, with Parsons Corporation, a more fatigue-resistant detail for trapezoidal ribs. This detail is described in the AASHTO code. The superstructure was fabricated in 24 full-width sections in Japan, with bolted splices on the sides and bottom. The top deck is welded.

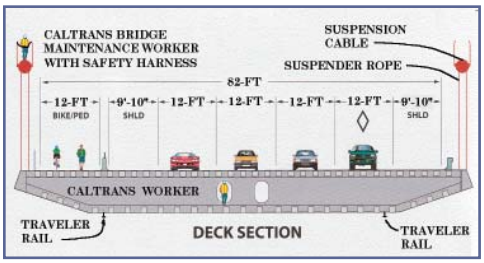

Figure 12: The Alfred Zampa Memorial Bridge across Carquinez Straits. Courtesy of Caltrans.

[http://www.franklinnewbridge.org]

Emergency Bridges for Replacing Damaged Bridges

Earthquakes, floods and landslides occasionally make it necessary to install temporary bridges to keep people, goods and services moving. These temporary bridges, where the Orthotropic spans are rapidly assembled, are intended as a replacement solution for a "Bailey"-type bridge. Caltrans owns ACROW type components. ACROW uses "chequered" steel deck welded to closely spaced "W-Beam" ribs. A wearing surface is not usually added.▪

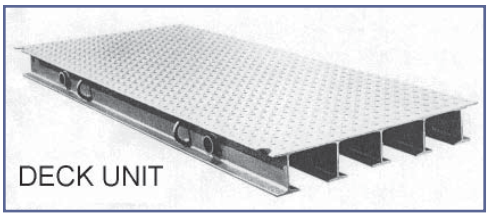

Figure 13a

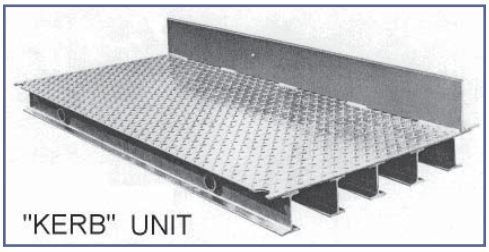

Figure 13b: The type of ACROW Components owned by Caltrans for a "Temporary" Bridge

The author has taken more than four years to collect and personally inspect and photograph most of these bridges. To share more information about these structures ASCE created www.orthotropic-bridge.org which included a conference, advanced seminar, introductory course and bus tour of these bridges located near San Francisco Bay. Thanks are extended to Paul Goryl, P.E., of Parsons; Sarah Picker, P.E. of Caltrans, tour coordinator; Jay P. Murphy, the builder of several of these bridges, and Ostap "Joe" Bender, P.E., for sharing papers, photos; etc. Special thanks to staff of the Caltrans HQ Library; Norm Root, P.E., of the Caltrans History and Heritage Committee; and my lead Senior Bridge Engineer, Carl Huang.

*Al Mangus is a Transportation Engineer, Civil, with CALTRANS in Sacramento, CA. He is licensed in 5 states. Mr. Mangus currently serves as the Junior Director of the ASCE Sacramento Section. Al can be reached at **Al_Mangus@dot.ca.gov** or **MangusAlf@aol.com** Opinions expressed in this article are those of Al Mangus.*

Appendex A and B, attached, include additional graphics for both articles.

France's Millau Orthotropic Steel Viaduct State of the Art Bridge Launching

by Alfred Mangus, P.E.

Appendix A

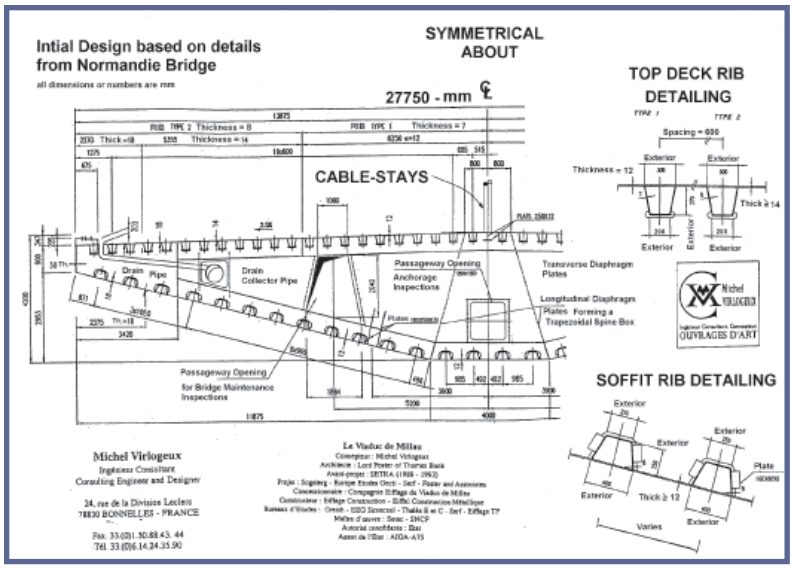

Millau Viaduct - initial design based on details from Normandie Bridge

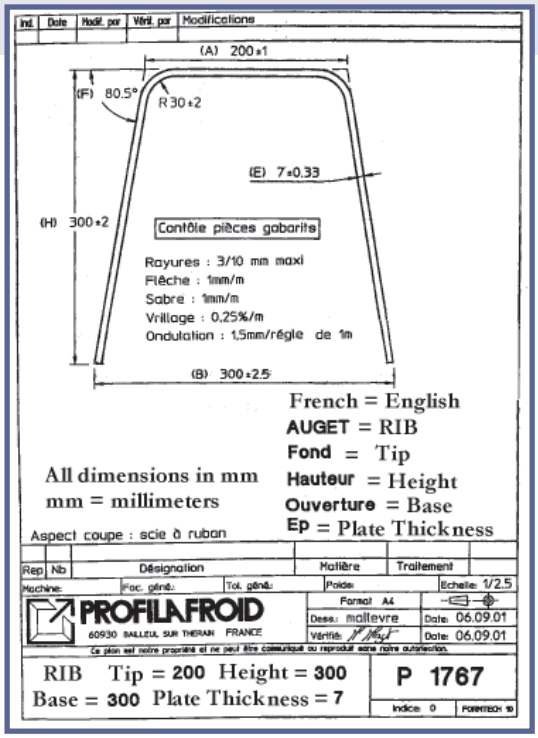

Millau Viaduct Rib Details

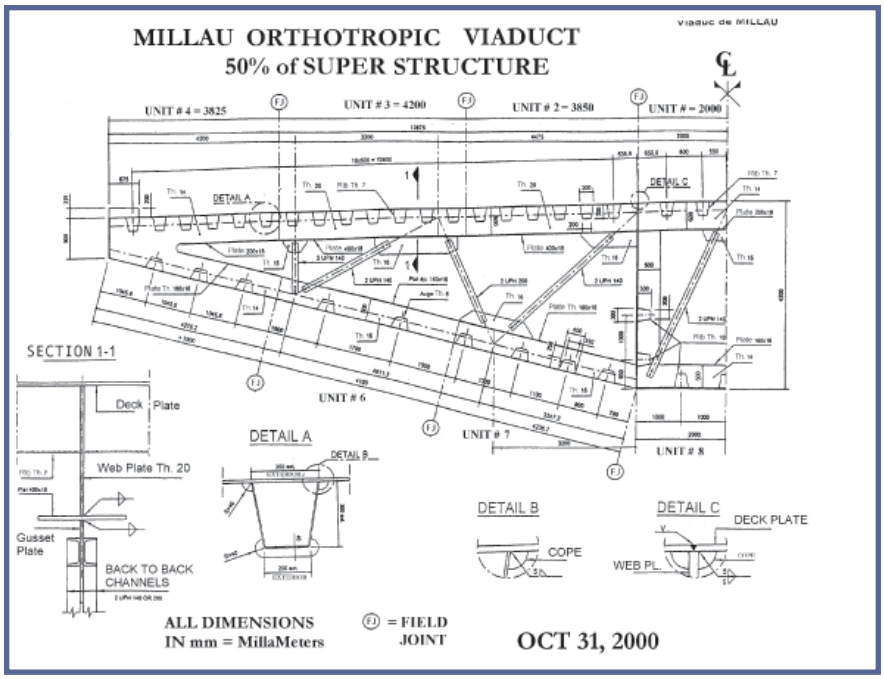

Millau Viaduct super structure

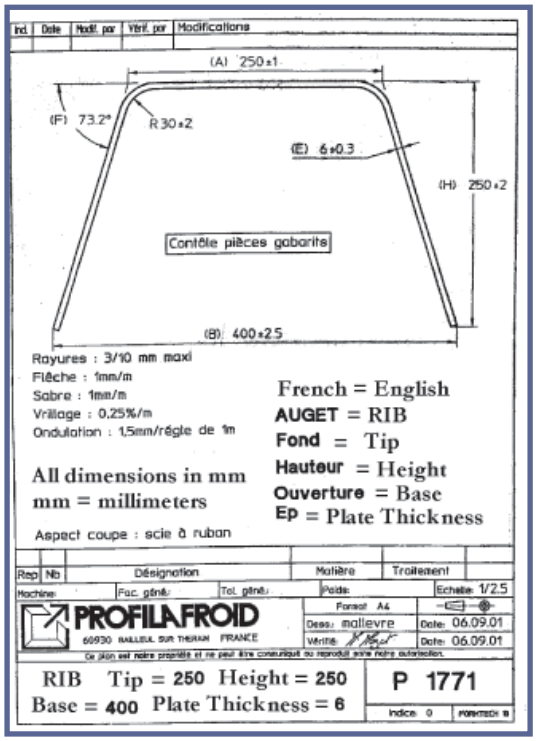

Millau Viaduct Rib Details

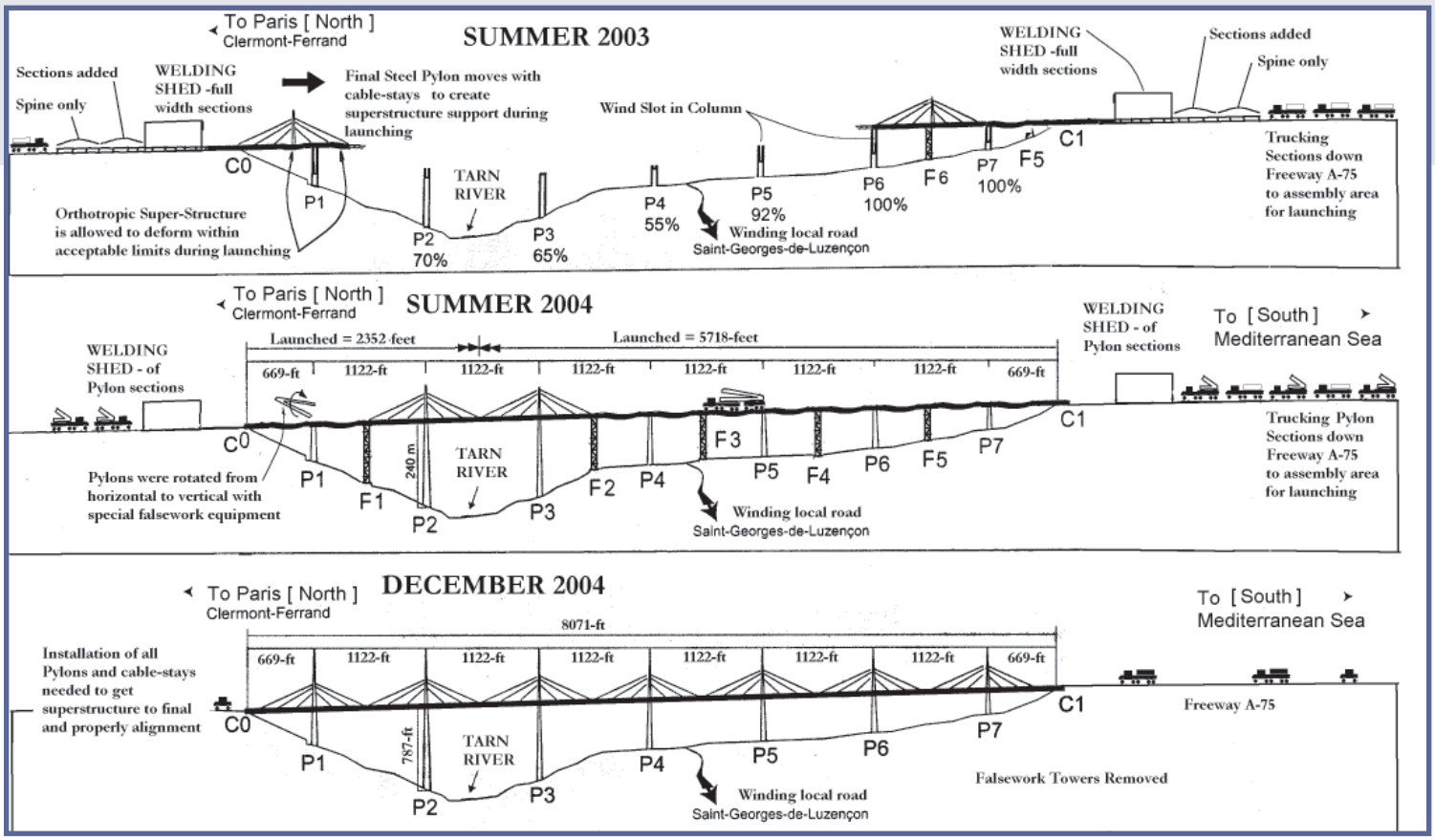

Millau Viaduct sequence of erection

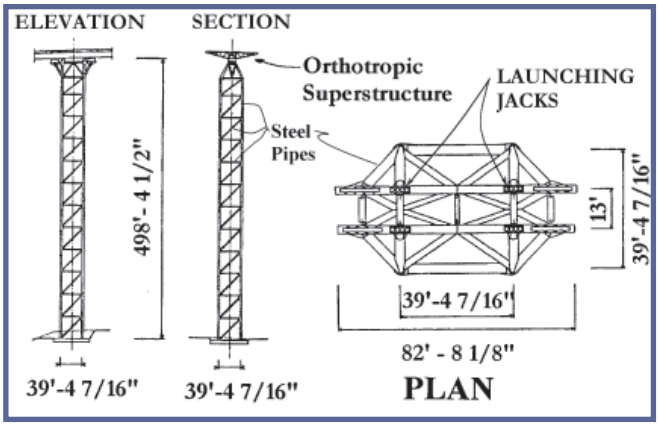

Millau Viaduct red pipe space truss falsework

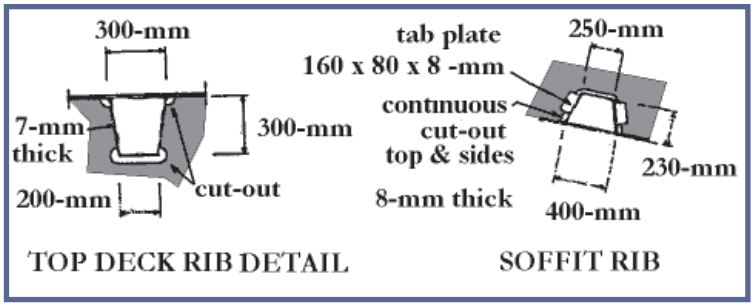

Millau Viaduct Rib Details with Shading

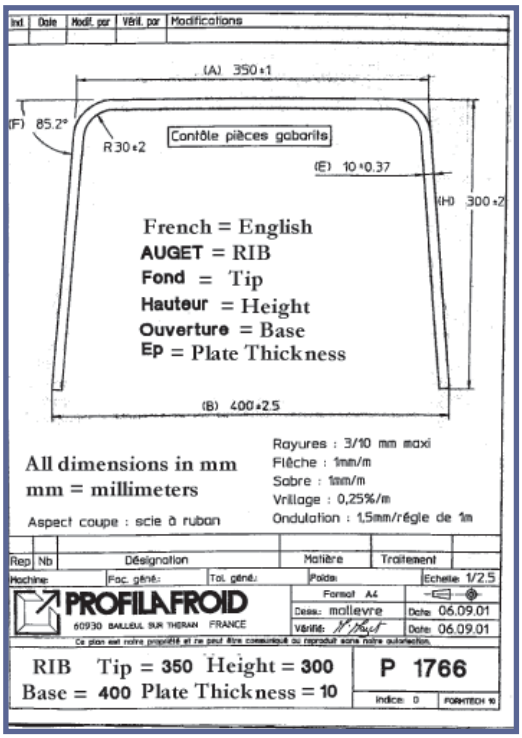

Millau Viaduct Rib Details

California's Orthotropic Steel Bridges

by Alfred Mangus, P.E.

Appendix B

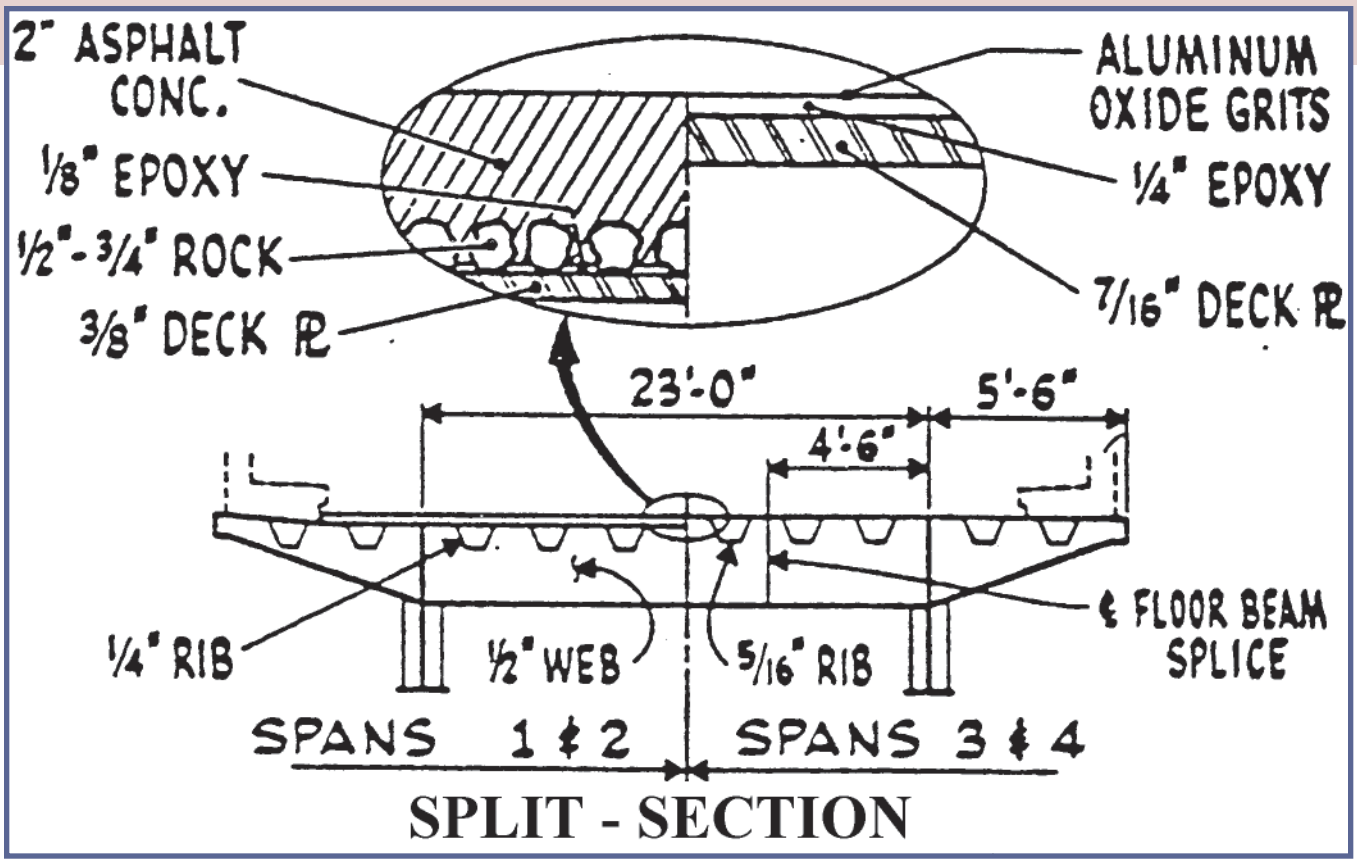

Wearing surface test bridge at Dublin

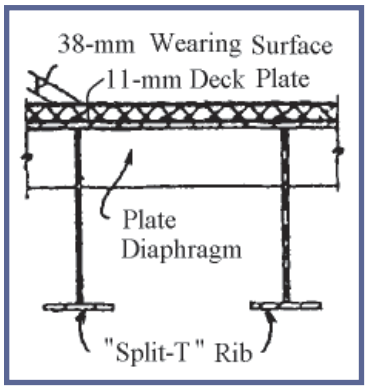

Wearing surface diagram

Colusa Bridge, lifting final segment

Below Maritime Off-Ramp Bridge

San Diego Coronado Bridge, final segment being put in place

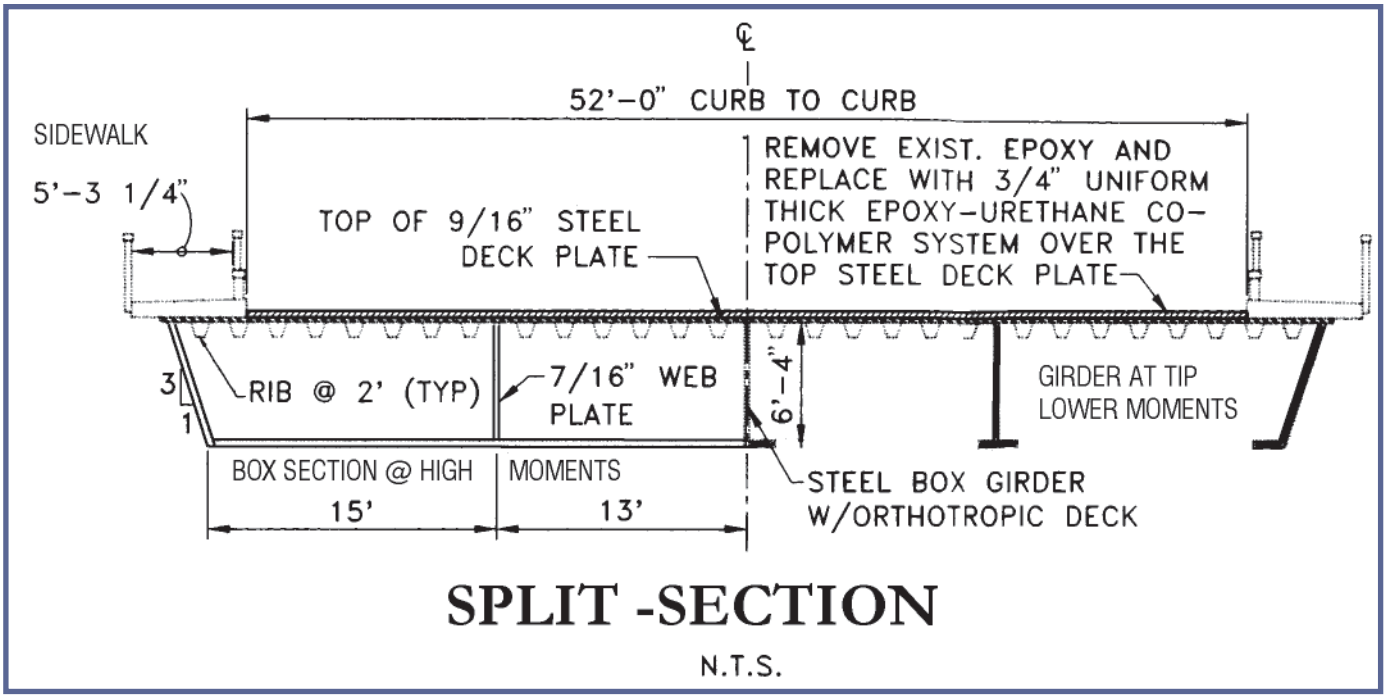

Cross section of Miller Sweeney Bascule Bridge